TM 11-856A

DEPARTMENT OF THE ARMY TECHNICAL MANUAL

RADIO RECEIVER R-390A/URR

DEPARTMENT OF THE ARMY • JANUARY 1956

WARNING

DANGEROUS VOLTAGES EXIST IN THIS EQUIPMENT

Be careful when working on the 240-volt power supply and circuits that are connected to it, or on the 115/230-volt ac line connections. Before connecting the receiver to an ac source, be sure that the chassis is connected to the same ground as the ac source.

Technical Manual
No. 11-856A

Department of the Army
Washington 25, D. C., 20 January 1956

RADIO RECEIVER R-390A/URR

		Paragraph	*Page*
CHAPTER 1.	**INTRODUCTION**		
Section I.	General	1, 2	1
II.	Description and data	3–10	2
CHAPTER 2.	**INSTALLATION**		
		11–17	9–17
CHAPTER 3.	**OPERATION**		
Section I.	Controls and instruments	18, 19	18
II.	Operation under usual conditions	20–28	19–24
III.	Operation under unusual conditions	29–32	24–25
CHAPTER 4.	**ORGANIZATIONAL MAINTENANCE**		
Section I.	Tools and equipment	33, 34	26
II.	Preventive maintenance services	35–39	26–29
III.	Lubrication and weatherproofing	40–41	30
IV.	Trouble shooting at organizational maintenance level	42–50	30–39
CHAPTER 5.	**THEORY**		
Section I.	Theory of Radio Receiver R-390A/URR	51, 52	40, 43
II.	Circuit analysis	53–78	44–87
III.	Analysis of mechanical tuning system	79–81	88–94
CHAPTER 6.	**FIELD MAINTENANCE**		
Section I.	General trouble-shooting techniques	82–85	95–97
II.	Trouble shooting Radio Receiver R-390A/URR	86–120	97–134
III.	Repairs	121–134	134–151
IV.	Alignment and adjustment procedures	135–152	151–165
V.	Final testing	153-168	165–174
CHAPTER 7.	**SHIPMENT AND LIMITED STORAGE AND DEMOLITION TO PREVENT ENEMY USE**		
Section I.	Shipment and limited storage	169, 170	175
II.	Demolition of materiel to prevent enemy use	171, 172	176
INDEX			
			189

scribed in SR 700-45-5 and AF TO 00-35D-54.

b. Damaged or Improper Shipment. DD Form 6, Report of Damaged or Improper Shipment, will be filled out and forwarded as prescribed in SR 745-45-5 (Army); Navy Shipping Guide, Article 1850-4 (Navy); and AFR 71-4 (Air Force).

c. Preventive Maintenance Forms.

(1) DA Form 11-238, Operator First Echelon Maintenance Check List for Signal Corps Equipment (Radio Communication, Direction Finding, Carrier, Radar), will be prepared in accordance with instructions on the back of the form (fig. 13).

(2) DA Form 11-239, Second and Third Echelon Maintenance Check List for Signal Corps Equipment (Radio Communication, Direction Finding, Carrier, Radar), will be prepared in accordance with instructions on the back of the form (fig. 14).

Section II. DESCRIPTION AND DATA

3. Purpose and Use

a. The receiver (fig. 1) is a high-performance, exceptionally stable, general-purpose receiver for use in both fixed and mobile service. The receiver provides reception of continous-wave (cw), modulated-continuous-wave (mcw), amplitude-modulated (am), frequency-shift keyed (fsk) and single-sideband (ssb) signals within a frequency range of .5 to 32 megacycles (mc). In this receiver, the radio-frequency (rf), intermediate-frequency (if), audio-frequency (af), oscillator and power-supply circuits are situated on individual removable subchassis (fig. 56 through 72) mounted on a front panel and main frame assembly (fig. 74). These subchassis can be removed readily for trouble shooting and repair in a minimum of time, by the use of ordinary hand tools. All the subchassis can be interchanged between any receivers bearing the same model number.

b. The receiver furnishes an output of 500 milliwatts (mw) of af power to a local 600-ohm load (loudspeaker and headset), and 10 mw of af power for application to a 600-ohm balanced line. Operation is possible from an alternating current (ac) input of either 115 or 230 volts ±10 per cent, 48 to 62 cycles per second (cps).

c. Connectors and terminals are provided for use of the receiver with auxiliary equipment. A 50-ohm, if output connection is provided for carrier-shift teletypewriter, single-sideband, or other auxiliary equipment. Automatic gain control (agc) and diode-detector load connections are available for use in diversity combining systems. When the receiver is used in a single-sideband reception system, an external agc circuit may be substituted for the internal control circuit. Connections are also provided for external manual rf gain control; however, when using only the receiver for single-sideband reception, manual gain control of the receiver should be used rather than automatic gain control. A break-in relay for disabling the receiver circuits is operated by grounding a terminal provided at the rear of the receiver.

d. The calibration of the receiver is accurate to within 300 cycles per second, an accuracy that permits use of the receiver as an accurate frequency meter.

4. System Application

a. Space-diversity Receiving System.

(1) Two or three receivers can be connected as a space-diversity receiving system for reception of voice signals (fig. 2). This system provides uniform audio output to a loudspeaker or headset, regardless of fading of signals.

(2) Rhombic or doublet antennas spaced at least 600 feet apart are connected to the two receivers.

b. Space-diversity Radioteletype System, Type 1. The upper half of figure 3 shows two receivers connected in a space-diversity radioteletype system. The doublet or rhombic antennas feed the incoming frequency-shift signals to the receivers, where they are converted to a frequency of 2,125 cycles for the *mark* condition and 2,975 cycles for the *space* condition of the radioteletype terminal equipment sending

contacts. The outputs taken from the LINE AUDIO outputs of the receivers are applied to Radioteletype Terminal Equipment AN/FGC-1, which provides diversity combining and produces direct current (dc) signals for operation of teletypewriter equipment. The receivers are connected for operation as described in paragraph 16. Use of parallel-connected agc circuits (par. 3*c*) provides improved signal-to-noise ratio.

c. Space-diversity Radioteletype System. Type 2. Two receivers also can be used in the type of space-diversity radioteletype system shown in the lower half of figure 3. The doublet or rhombic antennas feed the incoming frequency-shift signals to the receivers, where the carrier frequency is converted to a 455-kilocycle (kc) intermediate frequency. This if signal, taken from the 50-ohm if output circuit of the receivers, then is fed to Frequency Shift Converter CV-116/URR, which provides diversity combining and produces dc pulses for operation of teletypewriter equipment. The receivers are connected for operation as described in paragraph 16. Use of parallel-connected agc circuits (par. 3*c*) provides improved signal-to-noise ratio.

d. Single-sideband Radioteletype System.

(1) A receiver and a Single Sideband Converter CV-157/URR may be connected as shown in figure 4. This system permits the reception of single-sideband signals occupying 12 kc of rf spectrum space divided into two 6-kc sidebands on both sides of a reduced carrier; or, a double-sideband signal, either amplitude-modulated or phase-modulated (pm), occupying up to a total of 12 kc of spectrum space can be received. If phase modulation is received, the deviation cannot exceed an average of 1 radian. This system is used primarily for the reception of multi-channel radioteletype transmissions. For additional information, see TM 11-649, Radio Receiving Sets AN/FRR-40 and AN/FRR-41.

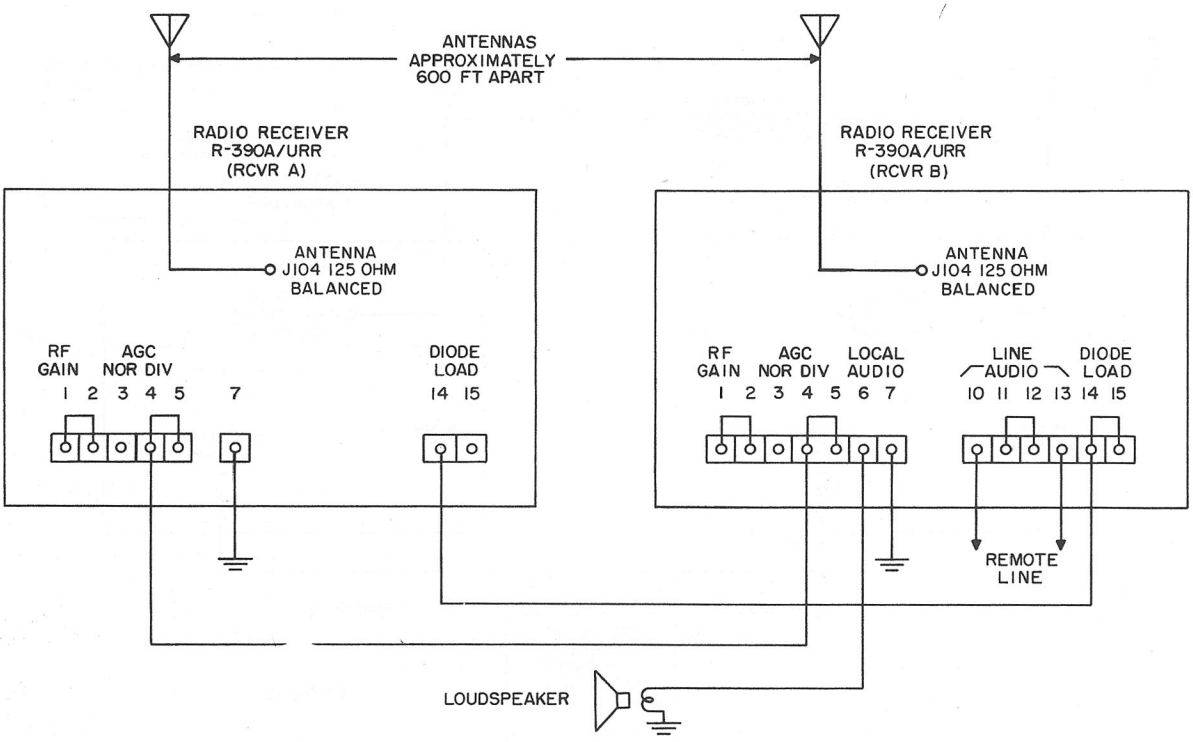

Figure 2. Space-diversity receiving system, block diagram.

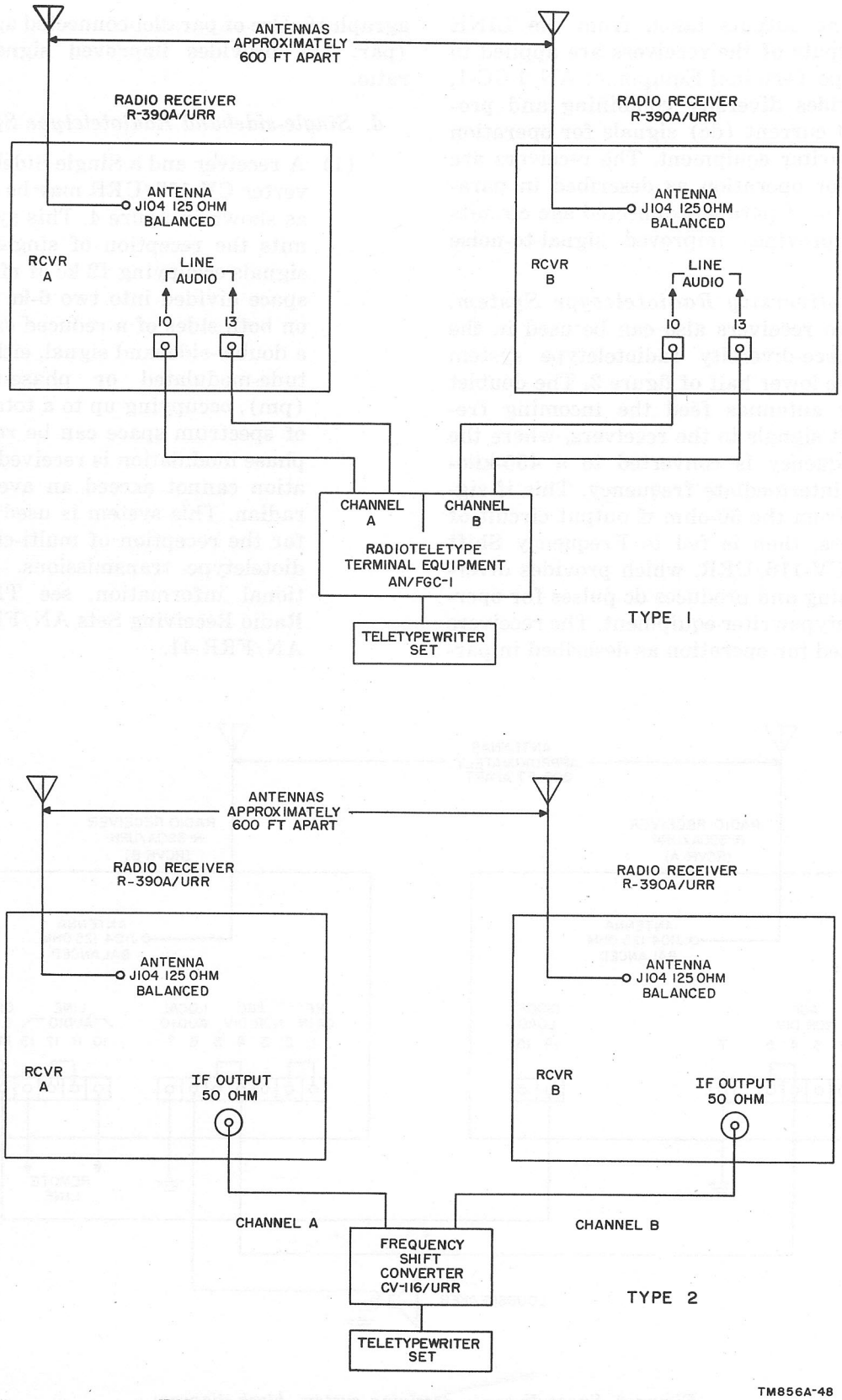

Figure 3. Two space-diversity radioteletype systems, block diagram.

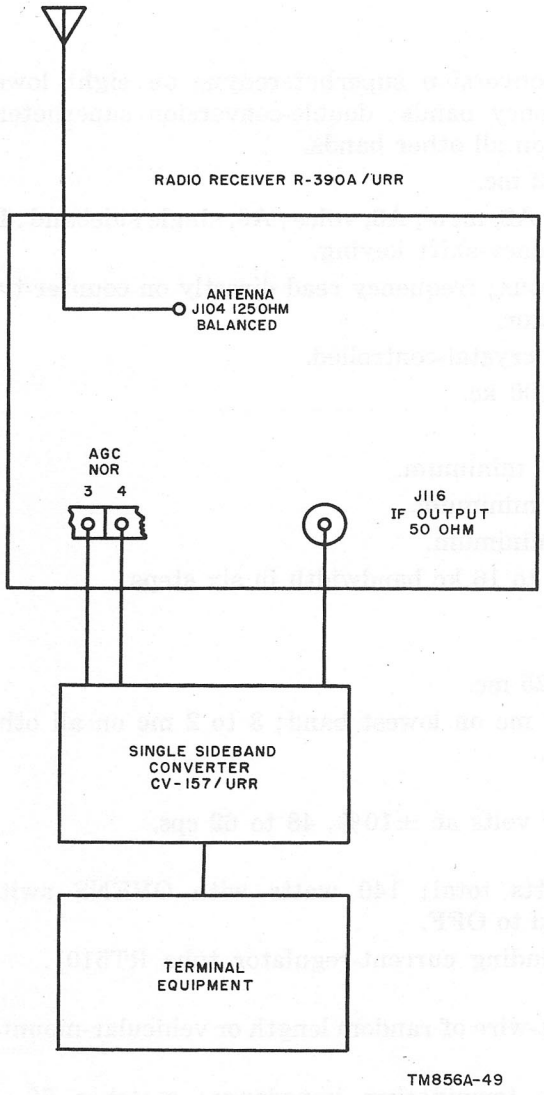

Figure 4. Single-sideband radioteletype system, block diagram.

(2) The 455-kc if output of the receiver is fed to Single Sideband Converter CV-157/URR, which heterodynes the if signal to 100 kc. The 100-kc signal is amplified and fed through highly selective filter circuits to separate the upper sideband, lower sideband, and carrier components of the original signal. The upper and lower sidebands are fed to individual detectors to recover the low-frequency (lf) intelligence that is fed to terminal equipment. The carrier component is used for automatic frequency control (afc) in the converter.

(3) The converter has provision for generating agc voltage from the carrier, upper sideband, lower sideband, or both the upper and lower sidebands, and feeding it back to the receiver. In addition, means are provided for restoring the original agc voltage of the receiver.

5. Technical Characteristics

Type of circuit ..... Triple-conversion superheterodyne on eight lowest frequency bands; double-conversion superheterodyne on all other bands.

Frequency range ..... 0.5 to 32 mc.

Types of signals received ..... A1, cw; A2, mcw; A3, voice; A9, single sideband; F1, frequency-shift keying.

Type of tuning ..... Continuous; frequency read directly on counter-type indicator.

Method of calibration ..... Built-in crystal-controlled.

Calibration points ..... Every 100 kc.

Audio power output:

- 600-ohm unbalanced line ..... 500 mw, minimum.
- 600-ohm balanced line ..... 10 mw, minimum.
- Headphones ..... 1 mw, minimum.

If selectivity ..... 100 cps to 16 kc bandwidth in six steps.

Intermediate frequencies:

- First variable if (used on eight lowest frequency bands) ..... 17.5 to 25 mc.
- Second variable if (used on all bands) .... 2.5 to 2 mc on lowest band; 3 to 2 mc on all other bands.
- Third (fixed) if ..... 455 kc.

Power source ..... 115/230 volts ac ±10%, 48 to 62 cps.

Power input:

- 115/230 volts ac ..... 225 watts total; 140 watts with OVENS switch turned to OFF.

Number of tubes ..... 26 (including current-regulator tube RT510).

Antennas:

- Unbalanced ..... Straight-wire of random length or vehicular-mounted whip.
- Balanced ..... 125-ohm terminating impedance; matches 50- to 200-ohm balanced or unbalanced transmission lines by using adapters.

Temperature range ..... -40° C (-40° F) to 65° C (149° F).

Altitude ..... Up to 10,000 ft. above sea level.

Weight ..... 75 lb.

Range of vfo ..... 3.455 to 2.455 mc.

6. Table of Components

Component	*Required No.*	*Height (in.)*	*Width (in.)*	*Depth (in.)*	*Volume (cu ft)*	*Unit wt (lb)*
Receiver	1	10–15/32	19	16–19/32	2	7
Technical manuals	2					2
Set of running spares	1					1
Total weight (lb)						80

Note. This list is for general information only. See appropriate supply publications for information pertaining to requisition of spare parts.

7. Description of Radio Receiver R-390A/URR

a. The receiver (fig. 1) is a 26-tube, superheterodyne receiver for reception of cw, voice, and radioteletype signals with a frequency range of .5 to 32 mc. The receiver is designed for mounting in a standard 19-inch rack, such as Electrical Equipment Cabinet CY-1119/U.

b. All operating controls are located on the front panel (fig. 11), which has a gray semigloss finish. Two handles are provided at the outer edges of the panel to aid in the removal of the receiver from the rack or case. The MEGACYCLE CHANGE and KILOCYCLE CHANGE controls are used to tune the receiver to the desired frequency. A counter-type frequency indicator shows the frequency in kilocycles. A LINE LEVEL meter is used to indicate the level in volume units (vu) of the line audio output of the receiver. The CARRIER LEVEL meter indicates the relative strength of the incoming signal. There are 15 bar knobs that control various functions of the receiver. The PHONES jack is used to connect a pair of headphones to the receiver local audio output.

c. On the rear panel of the receiver (fig. 12) are mounted special tools, antenna input connectors, an operating and a spare fuse, a power cord, an if output connector, an OVENS switch, and terminal strips for the connection of external circuits.

8. Description of Cases and Cabinets Used With Radio Receiver R-390A/URR

Two cases and two rack-type cabinets (not supplied) are available for use with the receiver. In addition, the receiver may be mounted in any standard 19-inch rack, if adequate ventilation is furnished. In mobile installations, the weight of the receiver must be supported at the rear of the main frame rather than by the front panel alone.

a. Cabinet CY-917/URR. This is a lightweight, table-top cabinet for general fixed-station use.

b. Cabinet CY-979/URR. This case is constructed more rigidly than the CY-917/URR, and has shock-absorbing mountings for mobile, table-top installations.

c. Electrical Equipment Cabinet CY-1119/U. This cabinet is a floor-mounted, rack-type installation for fixed-station use. Shelf-type angle brackets permit installation of the receiver by one man.

d. Electrical Equipment Cabinet CY-1216/U. This cabinet is of rugged construction and includes shock-absorbing mountings for mobile installations. When either electrical equipment cabinet is used with more than one receiver, always use a 1¾-inch or larger blank strip between the receivers for adequate ventilation.

Caution: When the receiver is installed in any case other than those described above, *adequate ventilation* must be provided. The receiver must be supported in the manner provided in Cabinet CY-979/URR and Electrical Equipment Cabinet CY-1216/U. For mobile applications of the receiver in cabinets other than Cabinet CY-979/URR and Electrical Equipment Cabinet CY-1216/U, support must be provided at the rear and bottom of the receiver, so that the front panel does not carry the entire weight. The recommended cabinets have dowel pins that engage holes at both rear lower corners of the receiver (fig. 12) and provide the required support.

9. Running Spares

A group of running spares is furnished with each receiver. The following is a list of running spares:

1 tube, type OA2.
1 tube, type 3TF7.
1 tube, type 6AK6.
1 tube, type 6C4.
1 tube, type 6DC6.
1 tube, type 26Z5W.
1 tube, type 5654/6AK5W.
2 tubes, type 5749/6BA6W.
2 tubes, type 5814A.
5 fuses, 3-ampere, 125-volt.
1 dial lamp, 6 volts, .2 ampere.

10. Additional Equipment Required

The following material is *not* supplied as a part of Radio Receiver R-390A/URR, but is required for its operation. The connectors required will depend on the particular installation. Also refer to paragraph 15.

Antenna:	
Balanced	Doublet or rhombic.
Unbalanced	Random-length straight-wire or whip.
Low-impedance transmission line:	
Balanced	50 to 200 ohms.
Unbalanced	70-ohm coaxial cable.
Connector	Connector Plug PL-259 or Connector Plug UG-573/U.
Headset	Headset Navy type CW-49507 or equivalent 600-ohm headset.
Cord	Headset Cord CX-1334/U, or equivalent.
Loudspeaker	600 ohms.
Adapter Connector UG-970/U	Adapts Connector Plug PL-259 on unbalanced antenna lead-in to balanced antenna input.
Adapter Connector UG-971/U	Adapts Connector Plug UG-573/U on unbalanced antenna lead-in to balanced antenna input.

Note. In adapting an unbalanced transmission line to the BALANCED ANTENNA input, use Connector Plug UG-573/U in combination with Adapter Connector UG-971/U wherever possible.

CHAPTER 2
INSTALLATION

11. Sitting Considerations

a. External Requirements.. The tactical situation and local conditions usually indicate the general area where this receiver is to be used. When locating the antenna within the general area, observe the following:

(1) Radio signals are absorbed and sometimes reflected by nearby obstructions such as hills, metal buildings and bridges, or leafy vegetation that extends above the height of the antenna. Transmitted signals have a greater range when the antenna is as high above ground as possible. Transmission and reception is best over water, or level or gently rolling ground.

(2) Enemy jamming action against the receiver is always a possibility. The effects of enemy jamming may be reduced by locating the antenna so that nearby obstructions act as a screen in the direction of probable sites of enemy jamming transmitters. This screening action may also reduce the transmitted signal strength in a direction toward the enemy, thereby making it more difficult for the enemy to intercept signals or to locate the transmitter by direction finding methods.

(3) If transmission and reception in all directions are required, place the antenna on the highest hill within the designated area.

(4) When possible, avoid locating the antenna near sources of electrical interference such as power or telephone lines, radar sets, and field hospitals.

(5) Where possible to do so, try several locations within the general area and select the one that provides the best signals from the desired stations, and for the best screening from the enemy.

b. Internal Requirements.

(1) For fixed service, mount the receiver in Electrical Equipment Cabinet CY-1119/U in Cabinet CY917/URR, or in a standard rack.

(2) For mobile use, mount the receiver in Electrical Equipment Cabinet CY-1216/U, or in Cabinet CY-979/URR. The shelter used must provide complete protection from the weather.

(3) *Always provide adequate ventilation (par. 14).*

12. Unpacking

a. Packaging Data. When packed for shipment, the components of the receiver are placed in a water-vaporproof container and packed in a wooden crate. An exploded view of the shipping crate and its contents is shown in figure 6. The dimensions of the crate are approximately 24¼ inches high, 20½ inches wide, and 14¾ inches deep. It weighs approximately 99.76 pounds, with a volume of approximately 3.89 cubic feet.

b. Removing Contents.

(1) Place the packing case as near the operating position as is convenient.

(2) Cut and fold back the metal straps.

(3) Remove the nails with a nail puller. Remove the top and one side of the wooden case if the receiver cannot be lifted out.

(4) Remove the desiccant bags, the cardboard tray, and the plywood board.

SITING

GOOD

HILLTOP, FLAT TERRAIN OR
NEAR LARGE WATER SURFACE

BAD

NEAR HIGH TENSION WIRES,
STEEL BRIDGES, OR IN
VALLEYS OR DEPRESSIONS

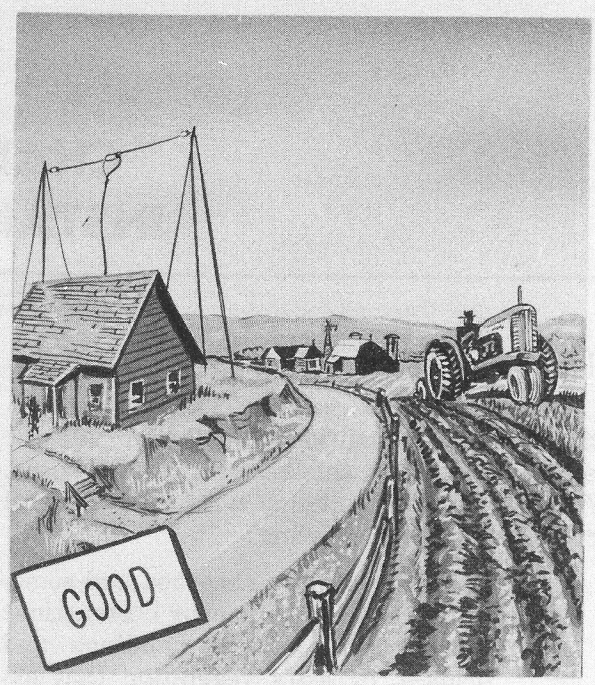

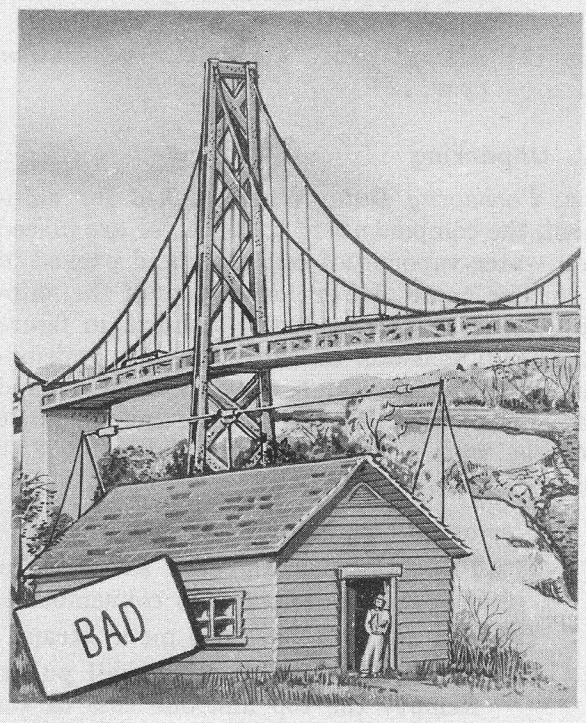

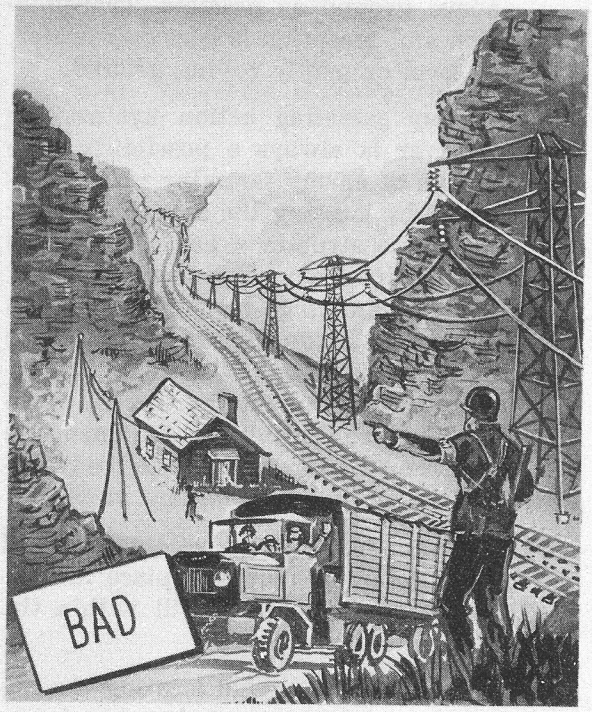

TM856A-98

Figure 5. Siting Radio Receiver R390A/URR.

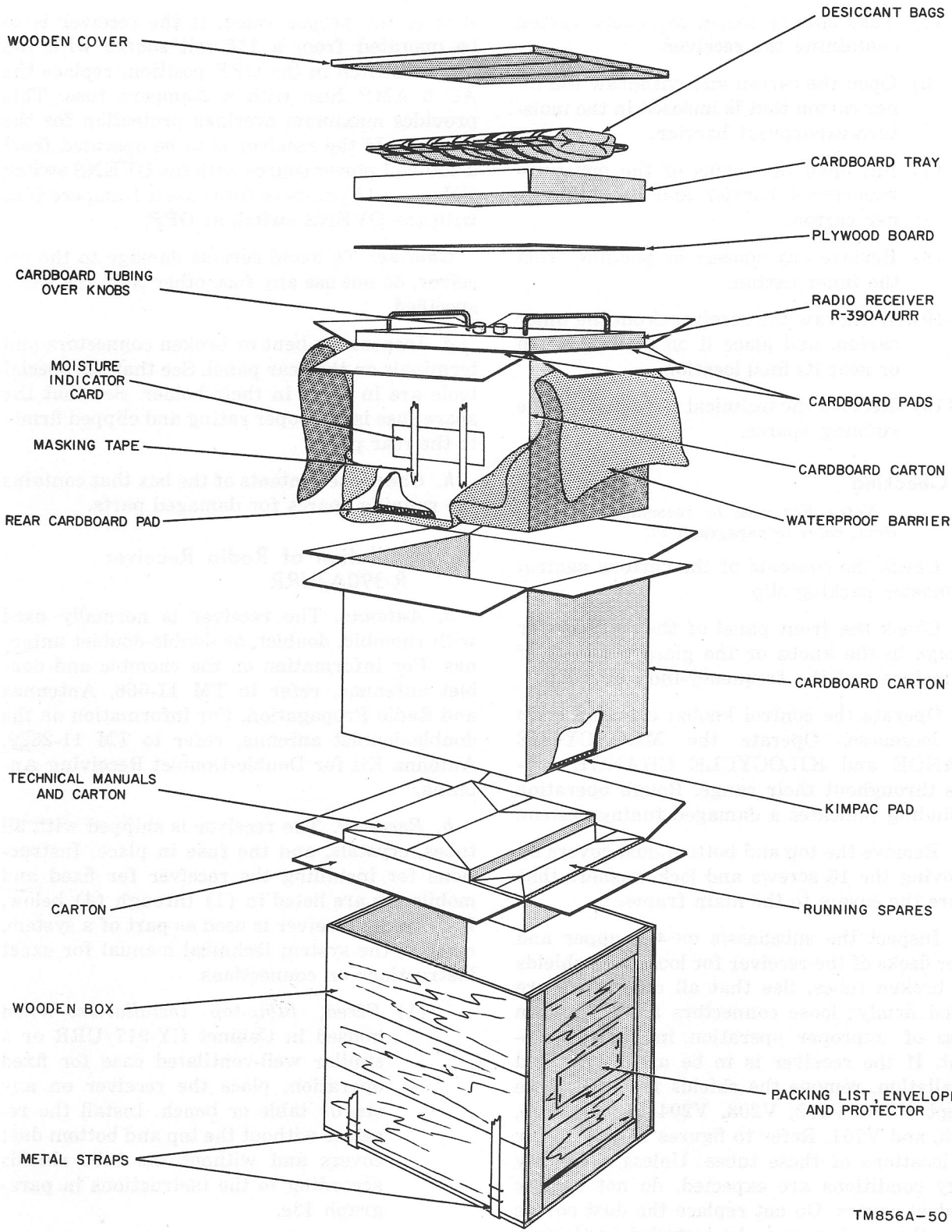

Figure 6. Packaging details.

(5) Take out the sealed cardboard carton containing the receiver.

(6) Open the carton and withdraw the inner carton that is inclosed in the moisture-vaporproof barrier.

(7) Slit open the seams of the moisture-vaporproof barrier and open the inner carton.

(8) Remove any spacers or padding from the inner carton.

(9) Withdraw the receiver from the inner carton, and place it on a work bench or near its final location.

(10) Remove the technical manuals and the running spares.

13. Checking

Note. For used or reconditioned equipment, refer to paragraph 17.

a. Check the contents of the cartons against the master packing slip.

b. Check the front panel of the receiver for damage to the knobs or the glass windows of the meters and the frequency-indicator dial.

c. Operate the control knobs; examine them for looseness. Operate the MEGACYCLE CHANGE and KILOCYCLE CHANGE controls throughout their range. Rough operation or binding indicates a damaged tuning system.

d. Remove the top and bottom dust covers by removing the 16 screws and lock washers that secure the covers to the main frame.

e. Inspect the subchassis on the upper and lower decks of the receiver for loose tube shields and broken tubes. See that all connectors are seated firmly; loose connectors are a common cause of improper operation in radio equipment. If the receiver is to be used in a fixed installation, remove the shields from all tubes except V201, V202, V203, V204, V205, V206, V505, and V701. Refer to figures 15 and 16 for the locations of these tubes. Unless extremely dusty conditions are expected, do not replace the dust covers. Do not replace the dust covers when the receiver is to be installed in Cabinet CY-979/URR or in Cabinet CY-917/URR.

f. Remove the fuse on the rear panel. See that it is of the proper value. If the receiver is to be operated from a 115-volt source with the OVEN switch in the OFF position, replace the AC 3 AMP fuse with a 2-ampere fuse. This provides maximum overload protection for the receiver. If the receiver is to be operated from a 230-volt power source with the OVENS switch ON, use a 1½-ampere fuse; use a 1-ampere fuse with the OVENS switch at OFF.

Caution: To avoid serious damage to the receiver, do not use any fuse other than the value specified.

g. Inspect for bent or broken connectors and terminals on the rear panel. See that the special tools are in place in their holder. See that the spare fuse is of proper rating and clipped firmly to the rear panel.

h. Check the contents of the box that contains the running spares for damaged parts.

14. Installation of Radio Receiver R-390A/URR

a. Antenna. The receiver is normally used with rhombic, doublet, or double-doublet antennas. For information on the rhombic and doublet antennas, refer to TM 11-666, Antennas and Radio Propagation. For information on the double-doublet antenna, refer to TM 11-2629, Antenna Kit for Double-Doublet Receiving Antenna.

b. Receiver. The receiver is shipped with all tubes, crystals, and the fuse in place. Instructions for installing the receiver for fixed and mobile use are listed in (1) through (4) below. If the radio receiver is used as part of a system, refer to the system technical manual for exact instructions on connections.

(1) *Fixed, table-top installation.* When housed in Cabinet CY-917/URR or a similar well-ventilated case for fixed operation, place the receiver on any sturdy table or bench. Install the receiver without the top and bottom dust covers and without the tube shields according to the instructions in paragraph 13*e*.

(2) *Fixed, cabinet installation.* To install the receiver in a standard cabinet, such as Electrical Equipment Cabinet

CY-1119/U, remove the top and bottom dust covers of the receiver. Remove one of the blank panels from the cabinet and install the receiver. Secure the front panel to the cabinet with the bolts removed from the blank panel. Insert them in the elongated holes located along the vertical edges of the receiver front panel (fig. 11).

(3) *Mobile, table-top installation.* When the receiver is housed in Cabinet CY-979/URR for mobile operation, securely bolt the case to a table or shelf that is fastened rigidly to the vehicle. Allow space for ventilation, for access to the connections on the back panel, and for withdrawal of the receiver from the case for servicing. To install the receiver in Cabinet CY-979/URR, first remove the top and bottom dust covers of the receiver.

(4) *Mobile, cabinet or rack installation.* When the receiver is installed in Electrical Equipment Cabinet CY-1216/U for mobile operation, securely bolt the cabinet to the vehicular body.

(5) *Ventilation.* In all types of installation, *provide as much ventilation as possible.* Do not operate the receiver with the dust covers in place unless extremely dusty or sandy conditions exist. For table-top cabinets, remove the dust covers before the receiver is installed. In fixed installations, operate the receiver with the tube shields removed (par. 13*e*). This will reduce the bulb temperature of the tubes and will prolong tube life. Wherever possible, allow space at the back of the cabinet or rack to allow for circulation of air.

(6) *Support.* For mobile installations, provide support for the lower rear of the receiver. This support is furnished in the cabinets listed in (3) and (4) above. When other cabinets are used, use the mounting holes that are provided at the rear of the receiver. Dowel pins may be inserted into them to hold the receiver securely. Figure 12 shows the dimensions required when installing the dowel pins in the cabinet.

15. Connections

Each receiver is shipped with jumpers between terminals 1 and 2, 3 and 4, 11 and 12, and 14 and 15. These four jumpers are required for normal operation.

Warning: The voltages used are high enough to endanger human life. To prevent shock hazard for personnel touching outside metallic parts of the receiver, connect GND terminal 16 (fig. 12) to the same ground as the ac power source. Do not depend on the front-panel mounting screws for a ground connection. Do not use the antenna transmission line shield for the chassis ground.

Caution: Check to see that TB801 is connected for the correct ac voltage (fig. 7). This terminal board can be reached when the power-supply subchassis is removed from the bottom of the receiver (par. 128). See figure 72 for the locations of TB801 and J811.

a. Power Input (fig. 7 and 8). For 115- or 230-volt, 48- to 62-cps operation, plug the ac power cord into the ac power source.

b. Antenna. Figure 9 shows the method of connecting coaxial connectors to the coaxial cable. The antenna is connected to either the UNBALANCED or the BALANCED ANTENNA connector (fig. 12) as follows:

(1) *UNBALANCED ANTENNA connector, J103.* When a whip antenna is to be used for vehicular installations or a random length wire is to be used in fixed installation, connect the lead-in to the UNBALANCED ANTENNA connector by means of Connector Plug UG-573/U. The whip antenna lead-in should be as short a length as possible of Radio Frequency Cable RG-8/U or RG-11/U.

(2) *BALANCED ANTENNA connector J104.* The BALANCED ANTENNA connector furnishes input to the receiver through a tuned antenna transformer. This connector is used for all balanced antennas, such as a balanced doublet, and should be used for unbalanced, low-impedance transmission lines. Connect the balanced coaxial Radio Frequency Cable RG-22, from

50- to 200-ohm balanced antennas to J104 with Connector Plug UG-421/U, or, when Radio Frequency Cable RG-86/U transmission line is used, use Connector Plug UG-969/U. Two right-angle adapters (fig. 10) are available for connecting unbalanced coaxial cable to the BALANCED ANTENNA connector. When unbalanced coaxial lead-in is terminated in Connector Plug PL-259, use Adapter Connector UG-970/U to connect it to the BALANCED ANTENNA connector. When unbalanced coaxial lead-in is terminated in Connector Plug Connector UG-573/U, use Adapter Connector UG-971/U to connect it to the BALANCED ANTENNA connector. Adapter Connector UG-971/U and Connector Plug UG-572/U are preferred and should be used when available. Connect a whip antenna through Connector Plug UG-573/U directly to the UNBALANCED ANTENNA connector.

c. Audio Output (fig. 8).

(1) A 600-ohm headset or speaker may be connected as indicated below:

(*a*) Insert the headset plug into the PHONES jack (fig. 11) or connect the headset between PHNS terminal 8 and ground, terminal 7 (fig. 12).

(*b*) Connect the loudspeaker between LOCAL AUDIO terminals 6 and 7 on the rear panel.

(2) A 600-ohm balanced line for telephone and similar applications may be connected as follows:

(*a*) For normal balanced-line operation, connect the line between LINE AUDIO terminals 10 and 13 on the rear panel. Do not remove the jumper from terminals 11 and 12.

(*b*) If a balancing bridge is to be used for long-distance line applications, remove the jumper from terminals 11 and 12 on the rear panel and connect the bridge between these terminals. Connect the balanced line between terminals 10 and 13.

d. Auxiliary Connections (fig. 12).

(1) *Break-in relay.* Connection to the break-in relay is completed through GND terminal 16 and BRK IN terminal 9 on the rear panel. The break-in relay operates to disable the receiver when the BREAK IN switch is set at ON and terminal 9 is grounded remotely.

(2) *External diode load.* DIODE LOAD terminals 14 and 15 on the rear panel provide detector diode-load combining for diversity reception. Connect together terminals 14 and 15 for normal receiver operation.

(3) *External rf gain control.* For external rf gain control of the receiver, disconnect the internal RF GAIN control at the terminal strip on the rear panel and connect externally a 5,000-ohm potentiometer. To substitute the external control for the internal RF GAIN control, remove the jumper between RF GAIN terminals 1 and 2 on the rear panel and connect the external control between terminal 1 and terminal 7 (ground), or between terminal 1 and terminal 16 (GND).

(4) *Agc circuit.* For external agc of the receiver, remove the jumper between AGC NOR terminals 3 and 4 on the rear panel, connect the negative terminal of the source to terminal 4, and connect the other terminal of the source to terminal 7 (ground).

16. System Connections

To improve the signal-to-noise ratio for diversity use, make the common agc connections as shown in figure 2. Move the jumpers from terminals 3 and 4 on each receiver to terminals 4 and 5. Connect together the No. 4 terminals.

a. Space-diversity Reception of Voice Signals. To connect two Radio Receivers R-390A/URR for space-diversity reception of voice signals, proceed as follows:

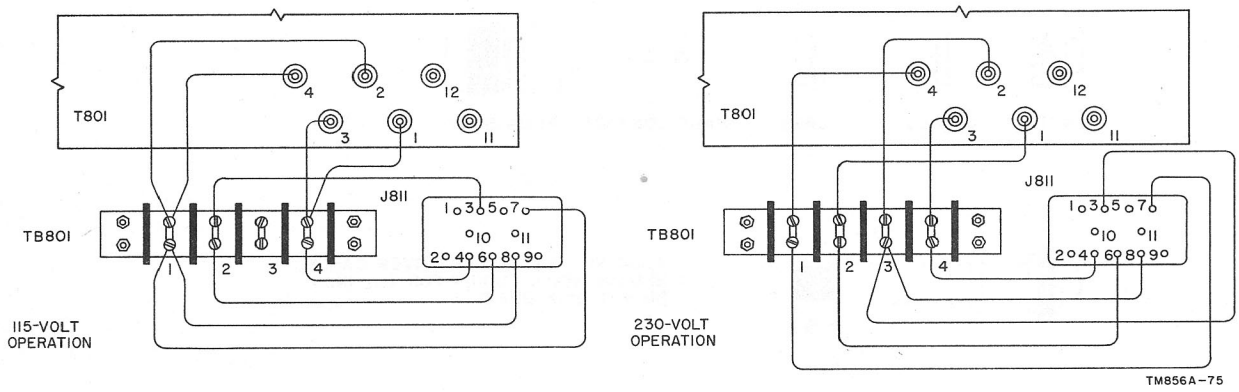

Figure 7. Connections for 115-volt or 230-volt operation.

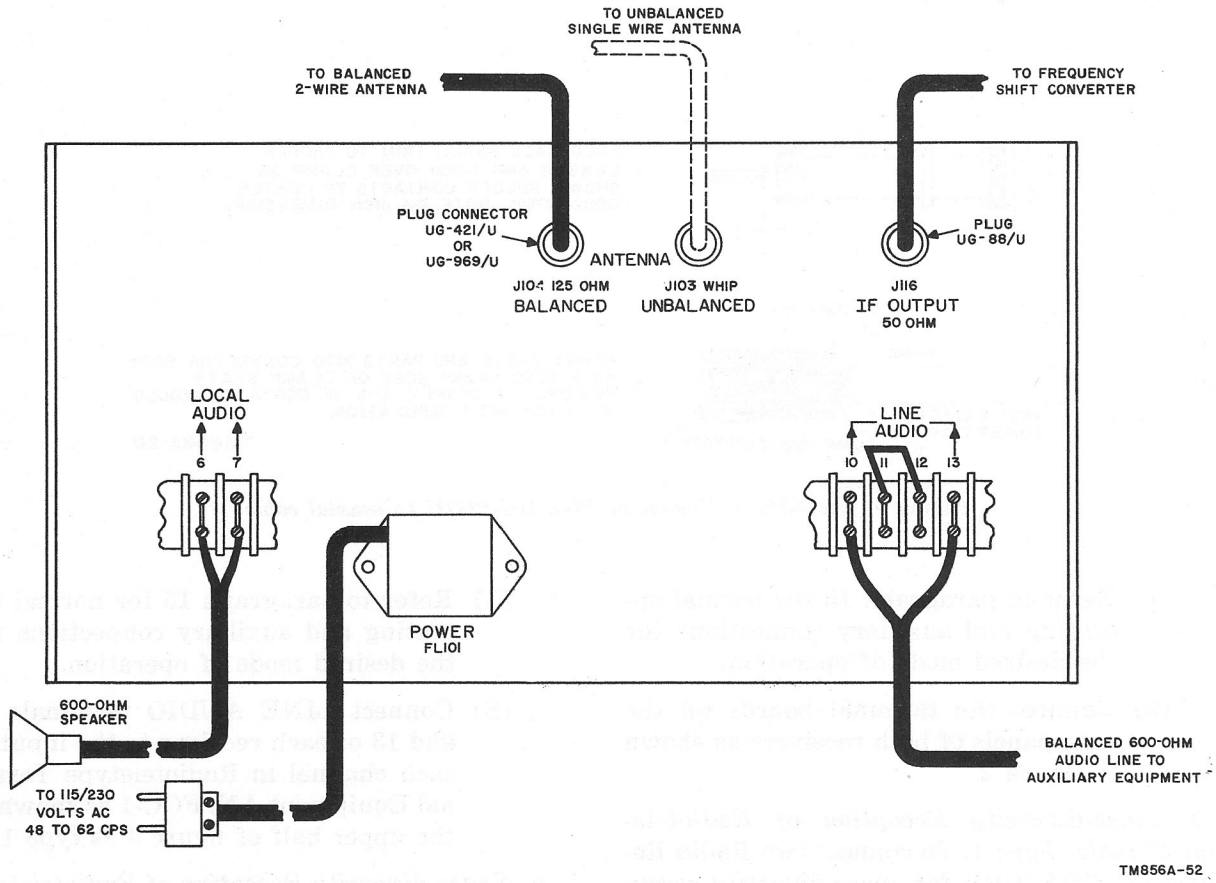

Figure 8. Radio Receiver R-390A/URR, cording diagram.

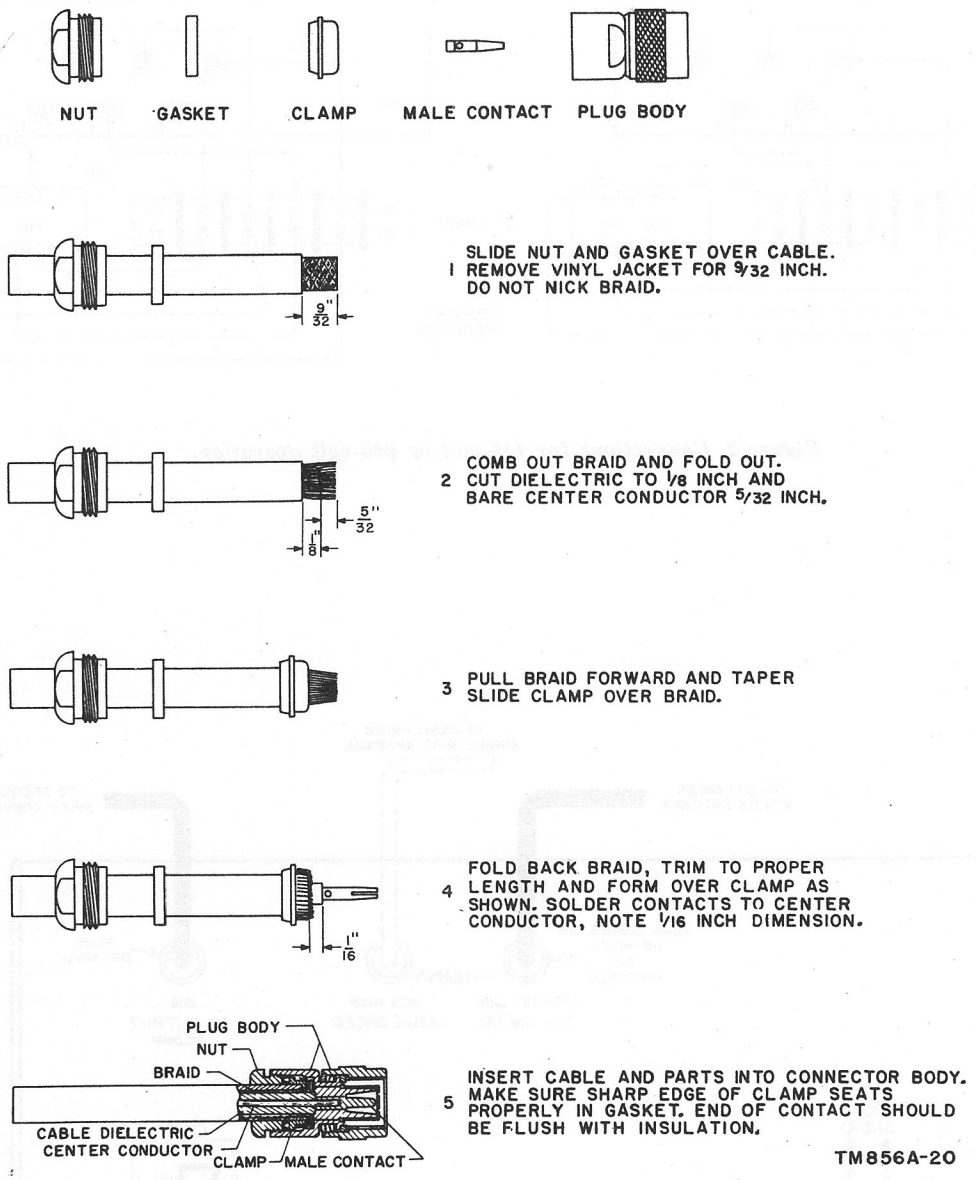

Figure 9. Assembly of Connector Plug UG-573/U to coaxial cable.

(1) Refer to paragraph 15 for normal operating and auxiliary connections for the desired mode of operation.

(2) Connect the terminal boards on the rear panels of both receivers as shown in figure 2.

b. Space-diversity Reception of Radioteletype Signals, Type 1. To connect two Radio Receivers R-390A/URR for space-diversity reception of radioteletype signals using the audio output of the receivers, proceed as follows:

(1) Refer to paragraph 15 for normal operating and auxiliary connections for the desired mode of operation.

(2) Connect LINE AUDIO terminals 10 and 13 of each receiver to the input of each channel in Radioteletype Terminal Equipment AN/FGC-1 as shown in the upper half of figure 3 as type 1.

c. Space-diversity Reception of Radioteletype Signals, Type 2. To connect two Radio Receivers R-390A/URR for space-diversity reception of

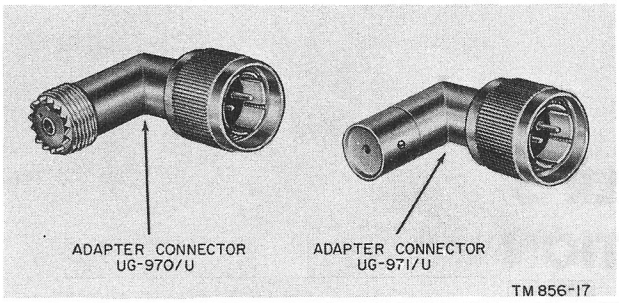

Figure 10. Adapter Connectors UG-970/U and UG-971/U.

radioteletype signals using the if outputs of the receivers, proceed as follows:

(1) Refer to paragraph 15 for normal operating and auxiliary connections for the desired mode of operation.

(2) Connect the IF OUTPUT connector (J116) of each receiver to the input of each channel in Frequency Shift Converter CV-116/URR as shown in the lower half of figure 3. (A cable terminated in Radio Frequency Plug UG-88/U is required for connection to J116.)

d. Single-sideband Reception. To connect Radio Receiver R-390A/URR for the reception of multichannel radioteletype signals using Single Sideband Converter CV-157/URR, proceed as follows:

(1) Refer to paragraph 15 for normal operating and auxiliary connections for the desired mode of operation.

(2) Connect AGC NOR terminals 3 and 4 and the IF OUTPUT connector (J116) to the agc line terminals and the if input connector on Single Sideband Converter CV-157/URR as shown in figure 4. (A cable terminated in Radio Frequency Plug UG-88/U is required for connection to J116.)

17. Service Upon Receipt of Used or Reconditioned Equipment

a. Follow the instructions in paragraphs 12*b* and 13 for uncrating, unpacking, and inspecting new equipment.

b. Check to see whether the used or reconditioned equipment has been changed by a Modification Work Order (MWO). If modified, the MWO number will appear on the front panel near the name plate. Indicate the MWO number on the schematic diagram. (fig. 106).

c. Check the MEGACYCLE CHANGE and KILOCYCLE CHANGE controls for ease of rotation. If lubrication is required, refer to the lubrication instructions in paragraph 133.

d. Perform the installation and connection procedures given in paragraphs 14, 15, and 16.

CHAPTER 3
OPERATION

Section I. CONTROLS AND INSTRUMENTS

18. General

Haphazard operation or improper setting of the controls can result in poor reception. For this reason, it is important to know the function of every control. The actual operation of the equipment is discussed in paragraphs 20 through 28.

19. Radio Receiver R-390A/URR Controls

(fig. 11 and 12)

The following table lists the controls of the receiver and indicates their function:

Control	*Function*
LINE LEVEL meter (M101)	Indicates level of balanced-line audio output.
LINE METER switch (S105)	In OFF position, disconnects LINE LEVEL meter from balanced-line output. In +10 position, 10 vu is to be added to LINE LEVEL volume units reading; in 0 position, LINE LEVEL meter is read directly in volume units; in −10 position, 10 vu is to be subtracted from LINE LEVEL volume units reading.
LINE GAIN control (R104)	Controls level of af signal applied to balanced-line output terminals.
AGC switch (S107)	Determines rapidity of change in gain of receiver for a change of signal strength.
LIMITER switch and control (S108 and R120)	In positions 1 through 10, peak signal impulses are cut off to reduce static interference. Increased reduction of signal peaks is obtained at clockwise positions of control. In the OFF position, limiter does not operate.
CARRIER LEVEL meter (M102)	Indicates level of incoming rf signal. Indication of 0 decibel when RF GAIN control is at position 10 corresponds to an input signal of less than 2 to 5 microvolts.
BANDWIDTH switch (S501, S502, S503)	Selects width of the if pass band in KC.
BFO PITCH control (Z502)	Varies frequency of tone when receiving continuous-wave signals.
AUDIO RESPONSE switch S104	Varies response of audio amplifier. In SHARP position, an 800-cycle-per-second tone is loudest. In WIDE position, all frequencies passed by the BANDWIDTH switch are heard.
BREAK IN switch (S103)	In ON position, permits break-in operation of receiver when proper connections have been made at rear panel. In OFF position, break-in operation is not possible.
FUNCTION switch (S102)	In OFF position, receiver is turned completely off. Other positions and functions are: *Position* — *Function* STAND BY — Receiver inoperative, but ready for instant use. AGC — Receiver operative, with gain controlled automatically. MGC — Receiver operative, with gain controlled manually by RF GAIN control or by an external gaintrol. CAL — Permits calibration of the tuning system at 100-kc points.

Control	*Function*
ANT TRIM control (C225)	Permits peaking of received signal to maximum value.
BFO switch (S101)	In ON position, places beat-frequency oscillator in operation. In OFF position, beat-frequency oscillator is inoperative.
DIAL LOCK	In clockwise position, locks KILOCYCLE CHANGE control to prevent accidental change of setting. Unlocks in counterclockwise position.
ZERO ADJ	When turned clockwise, disengages frequency indicator from KILOCYCLE CHANGE control for calibration purposes.
LOCAL GAIN control (R105)	Controls level of af signal applied to local output terminals.
RF GAIN control (R103)	Controls gain of rf and if amplifiers.

Control	*Function*
KILOCYCLE CHANGE control	Tunes receiver to any frequency within a band, and changes reading of last three digits on frequency indicator. Frequency range of control slightly greater than 1 mc; when tuned to frequency higher or lower than that indicated by first two digits, plus or minus sign is displayed in space between mc and kc readings indicating, respectively, addition or subtraction of 1 mc in reading of first two digits to obtain true reading.
MEGACYCLE CHANGE control	Selects any one of 32 tuning steps; changes reading of first two digits of frequency indicator.
PHONES jack (J102)	Provides means of connecting headset to the receiver.
OVENS switch (S106, on rear panel)	Screw-driver operated. In ON position, turns on oscillator heaters for increased frequency stability.

Section II. OPERATION UNDER USUAL CONDITIONS

Warning: The voltages employed are high enough to endanger human life. Every precaution should be taken by personnel to minimize the danger of shock. Be sure that the GND terminal 16 on the rear panel (fig. 12) is connected to the same ground as the ac power source.

20. Starting Procedure

Caution: Set the ac power supply of the receiver to the correct ac input voltage. Refer to paragraph 15 and figure 7. Be sure that all of the external connections to the receiver are satisfactory for the desired type of operation outlined in paragraphs 15 and 16.

a. If the receiver is operated under low-temperature conditions, or in a location where there is considerable change in temperature, set the screw-driver-adjusted OVENS switch S106 on the rear panel to ON. When the set is operated in a temperature-regulated building, set the OVENS switch to OFF. Be sure the proper fuse is used (par. 13*f*).

b. Turn the FUNCTION switch to AGC. Before operating the receiver, allow it to warm up for several minutes.

21. Voice Reception

a. Set the controls as follows:

Control	*Position*
BFO	OFF
LINE GAIN	0
RF GAIN	10
LOCAL GAIN	5
BANDWIDTH	8 KC
AUDIO RESPONSE	WIDE
AGC	MED
LIMITER	OFF
DIAL LOCK	Counterclockwise

b. Use the MEGACYCLE CHANGE and KILOCYCLE CHANGE controls to set the frequency indicator to the frequency of the desired station. If a plus or minus sign appears in the space between the megacycle and kilocycle readings on the dial (because of overtravel of the KILOCYCLE CHANGE control) when tuning in an unknown station, the reading of the first two digits must be increased or decreased, respectively, by 1 mc to arrive at the correct frequency. To maintain maximum tuning accuracy, calibrate the frequency indicator as directed in paragraph 26 each time the MEGACYCLE

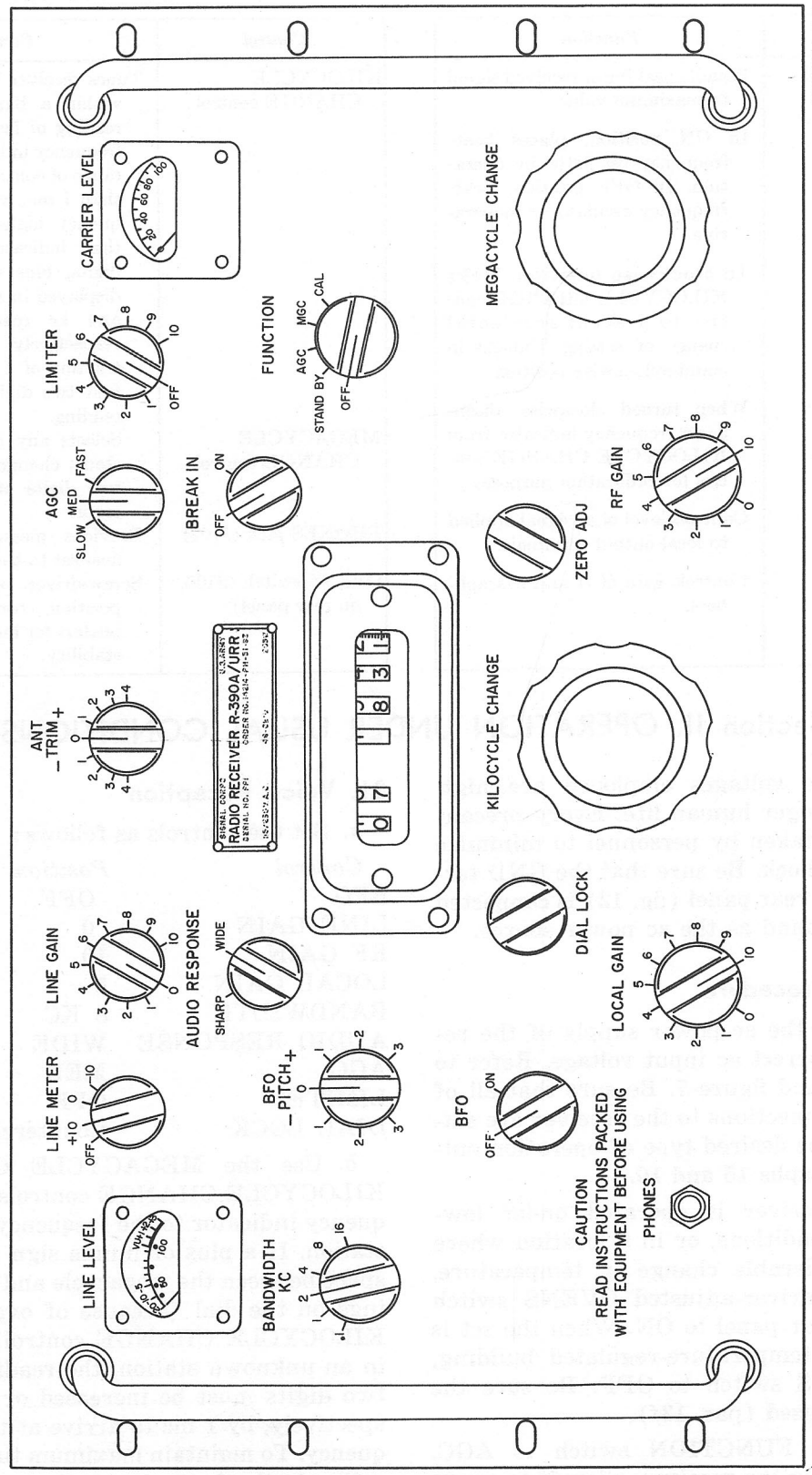

Figure 11. Radio Receiver R-390A/URR, front panel.

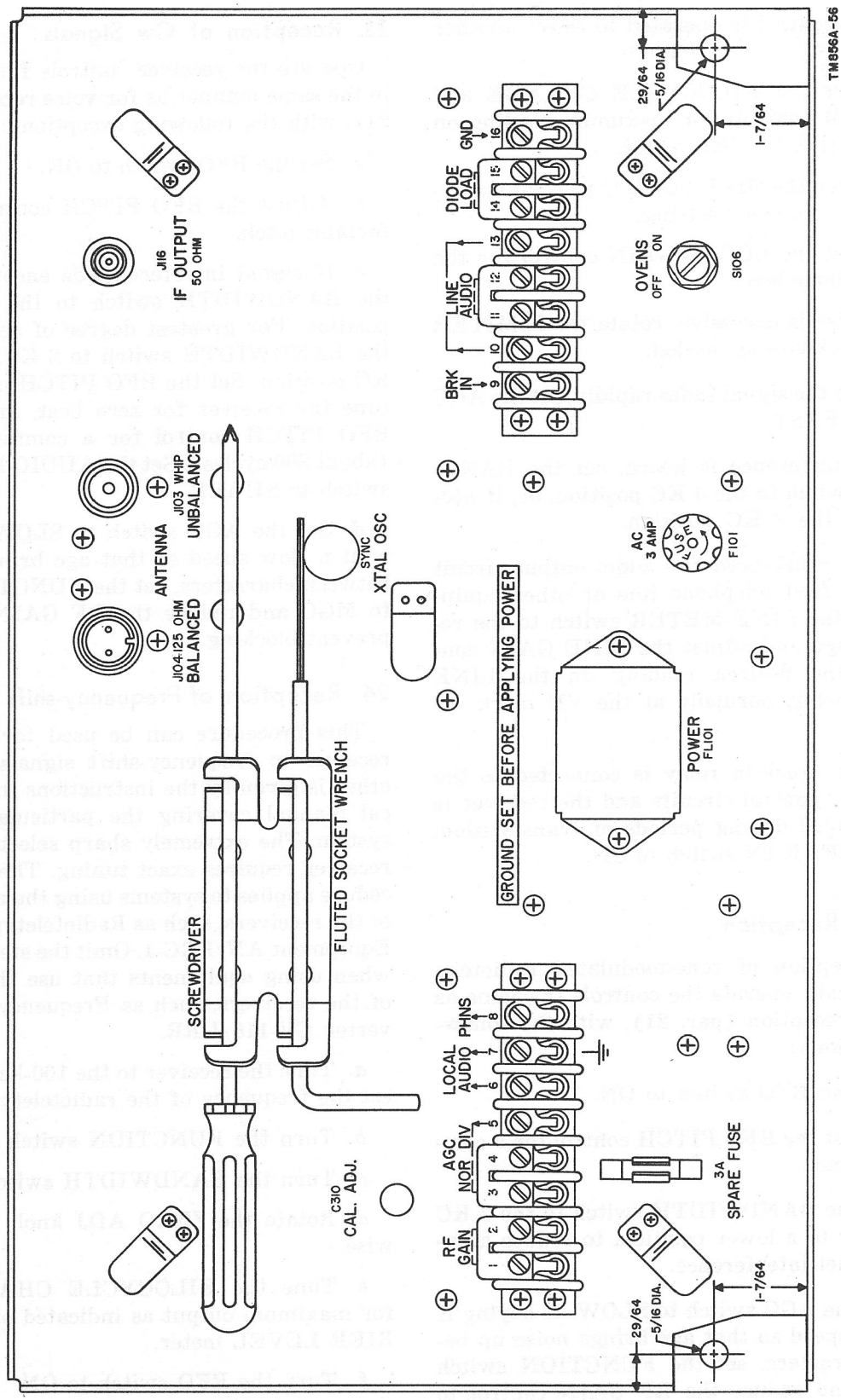

Figure 12. Radio Receiver R-390A/URR, rear panel.

CHANGE control is operated to select another band.

c. Adjust the KILOCYCLE CHANGE and ANT TRIM controls for maximum reading on the CARRIER LEVEL meter.

d. Tighten the DIAL LOCK to prevent changing of the frequency setting.

e. Adjust the LOCAL GAIN control for the desired volume level.

f. If noise is excessive, rotate the LIMITER control clockwise as needed.

g. When the signal fades rapidly, set the AGC switch to FAST.

h. If interference is heard, set the BANDWIDTH switch to the 4 KC position, or, if necessary, to the 2 KC position.

i. When a balanced-line audio output circuit is used to feed telephone line or other equipment, set the LINE METER switch to the required range and adjust the LINE GAIN control for the desired reading on the LINE LEVEL meter, normally at the VU mark (O VU).

j. If the break-in relay is connected to the transmitter control circuits and the receiver is to be disabled during periods of transmission, set the BREAK IN switch to ON.

22. Mcw Reception

For reception of tone-modulated radiotelegraph signals, operate the controls the same as for voice reception (par. 21), with the following exceptions:

a. Set the BFO switch to ON.

b. Adjust the BFO PITCH control for a comfortable tone.

c. Set the BANDWIDTH switch to the 2 KC position or to a lower position, to reduce adjacent channel interference.

d. Set the AGC switch to SLOW. If keying is at a slow speed so that agc brings noise up between characters, set the FUNCTION switch to MGC and reduce the RF GAIN control to prevent blocking.

23. Reception of Cw Signals

Operate the receiver controls for cw signals in the same manner as for voice reception (par. 21), with the following exceptions:

a. Set the BFO switch to ON.

b. Adjust the BFO PITCH control for comfortable pitch.

c. If signal interference is encountered, set the BANDWIDTH switch to the next lower position. For greatest degree of selectivity set the BANDWIDTH switch to 2 KC, 1 KC or .1 KC position. Set the BFO PITCH control at O, tune the receiver for zero beat, and reset the BFO PITCH control for a comfortable pitch (about 800 cycles). Set the AUDIO RESPONSE switch to SHARP.

d. Set the AGC switch to SLOW. If keying is at a slow speed so that agc brings noise up between characters, set the FUNCTION switch to MGC and reduce the RF GAIN control to prevent blocking.

24. Reception of Frequency-shift Signals

This procedure can be used for tuning the receiver to frequency-shift signals unless another is given by the instructions in the technical manual covering the particular receiving system. The extremely sharp selectivity of the receiver requires exact tuning. The entire procedure applies to systems using the audio output of the receivers, such as Radioteletype Terminal Equipment AN/FGC-1. Omit the step in *1* below when using equipments that use the if output of the receivers, such as Frequency Shift Converter CV-116/URR.

a. Tune the receiver to the 100-kc point nearest the frequency of the radioteletype signal.

b. Turn the FUNCTION switch to CAL.

c. Turn the BANDWIDTH switch to .1 KC.

d. Rotate the ZERO ADJ knob fully clockwise.

e. Tune the KILOCYCLE CHANGE knob for maximum output as indicated on the CARRIER LEVEL meter.

f. Turn the BFO switch to ON.

g. Adjust the BFO PITCH control for zero

beat. If the knob does not fall on 0, loosen the set screw, set the knob at 0, and tighten the set screw.

h. Turn the ZERO ADJ knob fully counterclockwise.

i. Set the BANDWIDTH control to 2 KC.

j. Turn the FUNCTION switch to AGC.

k. Tune the KILOCYCLE CHANGE control until mark and space signals with the same beat note are heard (with 850 cps shift this should be 425 cps).

l. Adjust the BFO PITCH control for proper operation of the radioteletype equipment.

Note. For filter-type terminal equipment, such as Radio-teletype Terminal Equipment AN/FGC-1 where audio frequencies of 2,125 cps and 2,975 cps are used, set the BFO PITCH knob between 2 and 3 (normally on the + side).

m. Turn the LINE GAIN control fully clockwise. The LINE LEVEL meter should show full deflection to the right. Adjust the LIMITER control until the reading on the LINE LEVEL meter is 0 vu. (There is no 0 marking on the meter; the 0 vu position is directly at the lettering *vu* on the meter face.)

25. Reception of Single-sideband Signals

Tuning the receiver for reception of single-sideband signals must be done accurately if this type of signal is to be received. The procedure for tuning the receiver to ssb voice signals is given below:

Note. This procedure may be used for ssb reception of am double-sideband signals. To eliminate interference and distortion caused by selective fading, use one or the other sideband.

a. Calibrate the receiver at the 100-kc calibration point nearest the single-sideband signal to be received (par. 26).

b. Set the FUNCTION switch to MGC.

c. Set the RF GAIN control to 5.

d. Set the LOCAL GAIN control between 5 and 10.

e. Set the BANDWIDTH switch to 2 KC.

f. Turn the BFO switch to ON.

g. Set the BFO PITCH control to —1 for upper sideband reception (+1 for lower sideband reception).

h. Tune to the carrier frequency 1 kc if the upper sideband is used (—1 kc if the lower sideband is used).

i. If a BANDWIDTH switch setting of 4 KC is to be used, double the —1 or +1 setting in the steps in *g* and *h* above.

j. Adjust the BFO PITCH and/or KILOCYCLE CHANGE controls slightly for the most intelligible signal reception.

k. Adjust the LOCAL GAIN and RF GAIN controls for the desired audio level.

26. Frequency-indicator Calibration

To maintain maximum tuning accuracy of the receiver, calibrate the frequency indicator at the 100-kc calibration point nearest the frequency desired for reception. Calibration is accomplished by the use of the internal calibration oscillator as follows:

a. Set the BANDWIDTH switch to the .1 KC position.

b. Set the AUDIO RESPONSE switch to WIDE.

c. Set the RF GAIN control to 10.

d. Set the LOCAL GAIN control to 5.

e. Set the BFO switch to ON.

f. Turn the BFO PITCH control to 0.

g. Turn the FUNCTION switch to CAL.

h. Adjust the MEGACYCLE CHANGE and KILOCYCLE CHANGE controls for a reading on the frequency indicator at the 100-kc point nearest the frequency desired for reception.

i. Turn the ZERO ADJ knob clockwise as far as it will go.

j. Rotate the ANT TRIM knob to obtain maximum indication on the CARRIER LEVEL meter.

k. Adjust the KILOCYCLE CHANGE control for a maximum indication on the CARRIER LEVEL meter.

l. Check to see that the BFO PITCH control produces a zero beat at the 0 position. If it does not, tune it for zero beat, loosen knob screw, and adjust to 0 without rotating the shaft. Tighten the screw with the fluted screw driver.

m. Turn the ZERO ADJ knob counterclock-

wise until it stops. The dial now is calibrated accurately.

27. Stopping Procedure

a. When the receiver is not to be used for a short interval but is to be maintained in a state of readiness, turn the FUNCTION switch to STAND BY.

Caution: The FUNCTION switch should not be left in the STAND BY position for too long a period of time. Under this condition of operation, with the filaments lighted and no plate voltage applied, the useful life of certain vacuum tubes may be shortened.

b. To shut off the receiver completely, turn the FUNCTION switch to OFF.

28. Antijamming Instructions

When it is determined that the receiver is being jammed so that the desired signal cannot be heard satisfactorily, inform the immediate superior officer promptly. To provide maximum intelligibility of jammed signals, adhere to the operational procedure indicated for each type of operation.

a. When receiving voice signals and the receiver is being jammed, follow the procedure in the order indicated below until the signal is heard with the least amount of interference.

(1) Rotate the KILOCYCLE CHANGE control very slowly through several dial markings on either side of the desired signal. Some separation of the desired signal from the jamming signal may be achieved.

(2) Set the BANDWIDTH switch to the 4 KC or 2 KC position, whichever gives the best results. Slowly tune as described in (1) above.

(3) Adjust the ANT TRIM control to the point where the signal is heard with the least amount of interference.

(4) If the noise is severe, adjust the LIMITER control as required.

(5) When the jamming signal is weak, set the FUNCTION switch to MGC and turn the RF GAIN control counterclockwise. The interfering signal may be reduced enough to permit part of the desired signal to come through.

(6) If these steps do not provide some degree of signal separation, request a change in frequency and call sign.

(7) Request the use of cw operation if this is permissible (*b* below).

(8) If practicable, change the direction, length, and height of the antenna. This practice may reduce the jamming effectiveness so that some degree of satisfactory reception is obtained.

(9) If the jamming action is such that communication is impossible, report this fact to the immediate superior. Keep the radio receiver tuned to the desired signal frequency; continue to operate.

b. When receiving cw or mcw signals and the receiver is being jammed, follow the procedure in the order indicated below until satisfactory reception is established.

(1) Rotate the KILOCYCLE CHANGE control very slowly through a few dial markings on either side of the desired signal. Some separation of the desired signal from the jamming signal may be achieved.

(2) Set the BANDWIDTH switch to the 1 KC or .1 KC position and set the AUDIO RESPONSE switch to SHARP. Slowly tune as described in (1) above.

(3) Reset the BFO PITCH control; it may be possible to separate the pitch of the desired signal from the jamming signal to provide readability.

(4) Perform the steps indicated in *a* (3) through (6), (8), and (9) above.

c. When receiving frequency-shift signals, refer to the technical manual covering the receiving system for antijamming instructions.

Section III. OPERATION UNDER UNUSUAL CONDITIONS

29. General

The operation of the receiver may be difficult in regions where extreme heat, cold, humidity and moisture, sand conditions, etc. prevail. Procedures are given in paragraphs 30, 31, and 32 for minimizing the effects of these unusual operating conditions.

30. Operation in Arctic Climate

Subzero temperatures and climatic conditions associated with them affect the efficient operation of the equipment. Instructions and precautions for operation under such adverse conditions follow: when the equipment has been exposed to cold and is brought into a warm room, moisture will condense on it until the equipment reaches room temperature. This condition also can develop when the room or shelter warms up after a cold night. When the equipment has reached room temperature, dry it thoroughly. The best way to dry the receiver is to turn the receiver on and let its own heat provide the drying action. Under conditions of extreme cold, allow a 45-minute warm-up time to allow the oscillators to reach a stable temperature and frequency. Leave the OVENS switch in the ON position to help maintain frequency stability.

31. Operation in Tropical Climate

The receiver never should be inclosed to such an extent that adequate circulation of air is prevented. When it is exposed to humid conditions, turn the receiver on to allow it to heat up and evaporate any condensed moisture.

32. Operation in Desert Climate

a. Conditions similar to those encountered in a tropical climate often prevail in desert areas. Use the same measures to insure proper operation of the equipment. Leave the OVENS switch in the ON position to compensate for the great difference in the day and night temperatures common in desert areas.

b. Keep the equipment as free from dust as possible. In rack-type cabinets, leave the top dust cover on. Make frequent preventive maintenance checks. Pay particular attention to the lubrication of the equipment (par. 133). Dust, sand, or dirt that comes into contact with oil and grease causes grit to form. This grit may cause damage to the equipment.

CHAPTER 4
ORGANIZATIONAL MAINTENANCE

Section I. TOOLS AND EQUIPMENT

33. Tools, Materials, and Test Equipment Required

The following tools, materials, and test equipment are required for organizational maintenance procedures.

a. Tools.

Tool Equipment TE-41

b. Materials.

Cheesecloth, bleached, lint-free
Sandpaper, flint #000
Cleaning Compound (Federal stock No. 7930-395-9542)

c. Test Equipment. A common usage name is indicated after each component.

Nomenclature	*Common name*
Electron Tube Test Set TV7/U	Tube tester
Multimeter TS-352/U	Multimeter

34. Special Tools Supplied

The special tools supplied with the receiver are mounted on the rear panel (fig. 12). The use of these tools is described in *a* and *b* below.

a. Phillips Screw Driver. The Phillips screw driver is used to remove the screws that secure dust covers, front panel, removable subchassis, terminal strips, etc.

b. Bristo (Fluted) Socket Wrench. The No. 8 fluted socket wrench is used for removing the front-panel bar knobs and the MEGACYCLE CHANGE and KILOCYCLE CHANGE knobs, and for loosening the collars that secure the camshafts and gears in the mechanical tuning system.

Section II. PREVENTIVE MAINTENANCE SERVICES

35. Definition of Preventive Maintenance

Preventive maintenance is work performed on equipment (usually when the equipment is not in use) to keep it in good working order so that breakdowns and needless interruptions in service will be kept to a minimum. Preventive mantenance differs from trouble shooting and repair because its object is to prevent certain troubles.

36. General Preventive Maintenance Techniques

a. Use #000 sandpaper to remove corrosion.

b. Use a clean, dry, lint-free cloth or a dry brush for cleaning. If necessary, moisten the cloth or brush with Cleaning Compound. After cleaning, wipe the parts dry with a cloth. Use Cleaning Compound on all parts, including electrical contacts.

Warning: Prolonged breathing of Cleaning Compound fumes is dangerous. Make sure adequate ventilation is provided. Cleaning Compound is flammable; do not use it near a flame.

c. For further information on preventive maintenance techniques, refer to TB SIG 178, Preventive Maintenance Guide for Radio Communication Equipment.

37. Use of First Echelon Preventive Maintenance Form

(fig. 13)

a. DA Form 11-238 is a preventive mainten-

OPERATOR FIRST ECHELON MAINTENANCE CHECK LIST FOR SIGNAL CORPS EQUIPMENT

RADIO COMMUNICATION, DIRECTION FINDING, CARRIER, RADAR

INSTRUCTIONS: See other side

EQUIPMENT NOMENCLATURE	EQUIPMENT SERIAL NO.
RADIO RECEIVER R-390 A/URR	47

LEGEND FOR MARKING CONDITIONS: ✓ Satisfactory; X Adjustment, repair or replacement required; Ⓧ Defect corrected.
NOTE: Strike out items not applicable.

DAILY

NO.	ITEM	CONDITION S	M	T	W	T	F	S
1	COMPLETENESS AND GENERAL CONDITION OF EQUIPMENT (*receiver, ~~transmitter, carrying cases, wire and cable, microphones, tubes,~~ spare parts, technical manuals and accessories*). PAR 39a(1)							
2	~~LOCATION AND INSTALLATION SUITABLE FOR NORMAL OPERATION.~~							
3	CLEAN DIRT AND MOISTURE FROM ~~ANTENNA, MICROPHONE,~~ HEADSETS, ~~CHESTSETS, KEYS,~~ JACKS, PLUGS, ~~TELEPHONES, CARRYING BAGS,~~ COMPONENT PANELS. PAR 36							
4	INSPECT SEATING OF READILY ACCESSIBLE "PLUCK-OUT" ITEMS: ~~TUBES,~~ LAMPS, ~~CRYSTALS,~~ FUSES, CONNECTORS, ~~VIBRATORS, PLUG-IN COILS AND RESISTORS.~~ PAR 39a(2)							
5	INSPECT CONTROLS FOR BINDING, SCRAPING, EXCESSIVE LOOSENESS, ~~WORN OR CHIPPED GEARS,~~ MISALIGNMENT, POSITIVE ACTION. PAR 39a(3)							
6	CHECK FOR NORMAL OPERATION. PAR 39a(4)							

WEEKLY

NO.	ITEM	CONDITION	NO.	ITEM	CONDITION
7	CLEAN AND TIGHTEN EXTERIOR OF COMPONENTS AND CASES, ~~RACK MOUNTS, SHOCK MOUNTS, ANTENNA MOUNTS, COAXIAL TRANSMISSION LINES, WAVE GUIDES,~~ AND CABLE CONNECTIONS. PAR 36		13	~~INSPECT STORAGE BATTERIES FOR DIRT, LOOSE TERMINALS, ELECTROLYTE LEVEL AND SPECIFIC GRAVITY, AND DAMAGED CASES.~~	
8	~~INSPECT CASES, MOUNTINGS, ANTENNAS, TOWERS, AND EXPOSED METAL SURFACES, FOR RUST, CORROSION, AND MOISTURE.~~		14	CLEAN ~~AIR FILTERS, BRASS~~ NAME PLATES, DIAL AND METER WINDOWS, ~~JEWEL ASSEMBLIES.~~ PAR 36	
9	INSPECT ~~CORD,~~ CABLE, ~~WIRE, AND SHOCK MOUNTS~~ FOR CUTS, BREAKS, FRAYING, DETERIORATION, KINKS, AND STRAIN. PAR 39b(1)		15	INSPECT METERS FOR DAMAGED GLASS AND CASES. PAR 39b(3)	
10	~~INSPECT ANTENNA FOR ECCENTRICITIES, CORROSION, LOOSE FIT, DAMAGED INSULATORS AND REFLECTORS.~~		16	~~INSPECT SHELTERS AND COVERS FOR ADEQUACY OF WEATHER-PROOFING.~~	
11	~~INSPECT CANVAS ITEMS, LEATHER, AND CABLING FOR MILDEW, TEARS, AND FRAYING.~~		17	~~CHECK ANTENNA GUY WIRES FOR LOOSENESS AND PROPER TENSION.~~	
12	INSPECT FOR LOOSENESS OF ACCESSIBLE ITEMS: SWITCHES, KNOBS, JACKS, CONNECTORS, ~~ELECTRICAL TRANSFORMERS, POWER-STATS, RELAYS, SELSYNS, MOTORS, BLOWERS, CAPACITORS, GENERATORS, AND PILOT LIGHT ASSEMBLIES.~~ PAR 39b(2)		18	~~CHECK TERMINAL BOX COVERS FOR CRACKS, LEAKS, DAMAGED GASKETS, DIRT AND GREASE.~~	

19 IF DEFICIENCIES NOTED ARE NOT CORRECTED DURING INSPECTION, INDICATE ACTION TAKEN FOR CORRECTION.

DA FORM 1 MAY 51 11-238 REPLACES DA AGO FORM 419, 1 DEC 50, WHICH IS OBSOLETE.

TM856A-45

Figure 13. DA Form 11-238.

SECOND AND THIRD ECHELON MAINTENANCE CHECK LIST FOR SIGNAL CORPS EQUIPMENT

RADIO COMMUNICATION, DIRECTION FINDING, CARRIER, RADAR

INSTRUCTIONS: See other side

EQUIPMENT NOMENCLATURE: RADIO RECEIVER R-390A/URR

EQUIPMENT SERIAL NO.: 47

LEGEND FOR MARKING CONDITIONS: ✓ Satisfactory; X Adjustment, repair or replacement required; (X) Defect corrected.

NOTE: Strike out items not applicable.

NO.	ITEM	COND.	NO.	ITEM	COND.
1	COMPLETENESS AND GENERAL CONDITION OF EQUIPMENT (*receiver, ~~transmitter, carrying cases, wire and cable, microphones, tubes,~~ spare parts, technical manuals and accessories*). PAR 39a(1)		19	~~ELECTRON TUBES - INSPECT FOR LOOSE ENVELOPES, CAP CONNECTIONS, CRACKED SOCKETS: INSUFFICIENT SOCKET SPRING TENSION; CLEAN DUST AND DIRT CAREFULLY; CHECK EMISSION OF RECEIVER TYPE TUBES.~~	
2	~~LOCATION AND INSTALLATION SUITABLE FOR NORMAL OPERATION.~~		20	~~INSPECT FILM CUT-OUTS FOR LOOSE PARTS, DIRT, MISALIGNMENT AND CORROSION.~~	
3	CLEAN DIRT AND MOISTURE FROM ~~ANTENNA, MICROPHONE~~, HEADSETS, ~~CHESTSETS, KEYS,~~ JACKS, PLUGS, ~~TELEPHONES, CARRYING BAGS,~~ COMPONENT PANELS. PAR 36		21	INSPECT FIXED CAPACITORS FOR LEAKS, BULGES, AND DISCOLORATION. PAR 39c(1)	
4	INSPECT SEATING OF READILY ACCESSIBLE "PLUCK-OUT" ITEMS: ~~TUBES,~~ LAMPS, ~~CRYSTALS,~~ FUSES, CONNECTORS, ~~VIBRATORS, PLUG-IN COILS AND RESISTORS.~~ PAR 39a(2)		22	INSPECT RELAY ~~AND CIRCUIT BREAKER~~ ASSEMBLIES FOR LOOSE MOUNTINGS; BURNED, PITTED, CORRODED CONTACTS; MISALIGNMENT OF CONTACTS AND SPRINGS; INSUFFICIENT SPRING TENSION; BINDING OF PLUNGERS AND HINGE PARTS. PAR 39c(2)	
5	INSPECT CONTROLS FOR BINDING, SCRAPING, EXCESSIVE LOOSENESS, ~~WORN OR CHIPPED GEARS,~~ MISALIGNMENT, POSITIVE ACTION. PAR 39a(3)		23	~~INSPECT VARIABLE CAPACITORS FOR DIRT, MOISTURE, MISALIGNMENT OF PLATES, AND LOOSE MOUNTINGS.~~	
6	CHECK FOR NORMAL OPERATION. PAR 39a(4)		24	INSPECT RESISTORS, ~~BUSHINGS, AND INSULATORS,~~ FOR CRACKS, CHIPPING, BLISTERING, DISCOLORATION ~~AND MOISTURE.~~ PAR 39c(3)	
7	CLEAN AND TIGHTEN EXTERIOR OF COMPONENTS AND CASES, ~~RACK MOUNTS, SHOCK MOUNTS, ANTENNA MOUNTS, COAXIAL TRANSMISSION LINES, WAVE GUIDES,~~ AND CABLE CONNECTIONS. PAR 36		25	~~INSPECT TERMINALS OF LARGE FIXED CAPACITORS AND RESISTORS FOR CORROSION, DIRT AND LOOSE CONTACTS.~~	
8	~~INSPECT CASES, MOUNTINGS, ANTENNAS, TOWERS, AND EXPOSED METAL SURFACES, FOR RUST, CORROSION, AND MOISTURE.~~		26	CLEAN AND TIGHTEN ~~SWITCHES, TERMINAL BLOCKS, BLOWERS, RELAY CASES, AND~~ INTERIORS OF CHASSIS AND CABINETS NOT READILY ACCESSIBLE. PAR 39c(4)	
9	INSPECT ~~CORD,~~ CABLE, ~~WIRE, AND SHOCK MOUNTS~~ FOR CUTS, BREAKS, FRAYING, DETERIORATION, KINKS, AND STRAIN. PAR 39b(1)		27	INSPECT TERMINAL BLOCKS FOR LOOSE CONNECTIONS, CRACKS AND BREAKS. PAR 39c(5)	
10	~~INSPECT ANTENNA FOR ECCENTRICITIES, CORROSION, LOOSE FIT, DAMAGED INSULATORS AND REFLECTORS.~~		28	~~CHECK SETTINGS OF ADJUSTABLE RELAYS.~~	
11	~~INSPECT CANVAS ITEMS, LEATHER, AND CABLING FOR MILDEW, TEARS, AND FRAYING.~~		29	LUBRICATE EQUIPMENT IN ACCORDANCE WITH APPLICABLE DEPARTMENT OF THE ARMY LUBRICATION ORDER. PAR 133	
12	INSPECT FOR LOOSENESS OF ACCESSIBLE ITEMS: SWITCHES, KNOBS, JACKS, CONNECTORS, ~~ELECTRICAL TRANSFORMERS, POWERSTATS, RELAYS, CELSYNS, MOTORS, BLOWERS, CAPACITORS, GENERATORS, AND PILOT LIGHT ASSEMBLIES.~~ PAR 39b(2)		30	~~INSPECT GENERATORS, AMPLIDYNES, DYNAMOTORS, FOR BRUSH WEAR, SPRING TENSION, ARCING, AND FITTING OF COMMUTATOR.~~	
13	~~INSPECT STORAGE BATTERIES FOR DIRT, LOOSE TERMINALS, ELECTROLYTE LEVEL AND SPECIFIC GRAVITY, AND DAMAGED CASES.~~		31	~~CLEAN AND TIGHTEN CONNECTIONS AND MOUNTINGS FOR TRANSFORMERS, CHOKES, POTENTIOMETERS, AND RHEOSTATS.~~	
14	CLEAN ~~AIR FILTERS, BRASS~~ NAME PLATES, DIAL AND METER WINDOWS, ~~JEWEL ASSEMBLIES.~~ PAR 36		32	INSPECT TRANSFORMERS, ~~CHOKES, POTENTIOMETERS, AND RHEOSTATS~~ FOR OVERHEATING AND OIL-LEAKAGE. PAR 39c(6)	
15	INSPECT METERS FOR DAMAGED GLASS AND CASES. PAR 39b(3)		33	~~BEFORE SHIPPING OR STORING - REMOVE BATTERIES.~~	
16	~~INSPECT SHELTERS AND COVERS FOR ADEQUACY OF WEATHERPROOFING.~~		34	~~INSPECT CATHODE RAY TUBES FOR BURNT SCREEN SPOTS.~~	
17	~~CHECK ANTENNA GUY WIRES FOR LOOSENESS AND PROPER TENSION.~~		35	~~INSPECT BATTERIES FOR SHORTS AND DEAD CELLS.~~	
18	~~CHECK TERMINAL BOX COVERS FOR CRACKS, LEAKS, DAMAGED GASKETS, DIRT AND GREASE.~~		36	~~INSPECT FOR LEAKING WATERPROOF GASKETS, WORN OR LOOSE PARTS.~~	
			37	MOISTURE AND FUNGIPROOF. PAR 41b	
38	IF DEFICIENCIES NOTED ARE NOT CORRECTED DURING INSPECTION, INDICATE ACTION TAKEN FOR CORRECTION.				

DA FORM 1 MAY 51 11-239 REPLACES DA AGO FORM 419, 1 DEC 50, WHICH IS OBSOLETE. e6-16-64382-1

TM856A-46

Figure 14. DA Form 11-239.

ance check list to be used by the operator as directed.

b. Items that do not apply to the receiver are lined out on figure 13. References in the ITEM block in the figure are to paragraphs in this manual that contain additional information about the item.

38. Use of Second and Third Echelon Preventive Maintenance Form

(fig. 14)

a. DA Form 11-239 is a preventive maintenance check list to be used by second and third echelon repairmen as directed.

b. Items that do not apply to the receiver are lined out on figure 14. References in the ITEM block in the figure are to paragraphs in this manual that contain additional information about the item.

39. Performing Preventive Maintenance

Caution: Tighten screws, bolts, and nuts carefully. Fittings tightened beyond the pressure for which they are designed will be damaged or broken.

a. Daily Items.

(1) Refer to the table of components (par. 6), the list of running spares (par. 9), and the list of additional equipment required (par. 10) when checking for completeness of the equipment.

(2) When checking the various pluck-out items, pay particular attention to the seating of the connectors on the cables that interconnect the subchassis.

(3) If binding of the KILOCYCLE CHANGE or the MEGACYCLE CHANGE control is found, it is possible that the bushing, mounted in the front panel, has been forced out of alignment with the shaft by having been tightened in the wrong manner. Remove the knob and loosen the large hexagonal nut that holds the bushing to the front panel. If the binding is relieved, tighten the nut carefully.

(4) When checking for normal operation, use the over-all operational test given in paragraph 45. If there is any doubt about the performance of the receiver after using this test, proceed to the equipment performance check list (par. 50).

b. Weekly Items.

(1) Inspect the power cable connected to the rear panel. Check to see that no strain is placed on it. Repair or replace it if it shows signs of wear or deterioration.

(2) Check all front-panel controls and knobs for looseness. The frequency indicator wheels should not move when the ZERO ADJ knob is tightened. If they do, the ZERO ADJ mechanism requires adjustment (par. 139). Also check the PHONES jack. If any parts are found to be loose, tighten them.

(3) Inspect the LINE LEVEL and CARRIER LEVEL meters (fig. 11) for damaged glasses and cases. If such damage is found, replace the meter, when possible.

c. Monthly Items.

(1) Capacitors C603 and C606 (fig. 57) are likely to show signs of leaking and bulging. Replace them if they do.

(2) Inspect relays K101A and K101B (fig. 73). If necessary, tighten the mounting screws. If the contacts appear to be dirty, burned, or pitted, clean them with a few light strokes of a contact burnisher. Brush out any dirt in the assemblies; pay particular attention to the hinges.

(3) Inspect all fixed resistors for cracks, chipping, blistering, and discoloration. Remove each subchassis except the power-supply subchassis. If any resistors do not appear to be satisfactory, replace them.

(4) Tighten all screws that hold the subchassis to the main frame. Brush out all dirt and dust from the subchassis. Remove the dust cover from the top of the rf subchassis and carefully brush out dust and dirt.

(5) Inspect the terminal strips on the rear panel (fig. 12). Carefully tighten the screws that hold the strips to the panel. Look for cracks and breaks.

(6) Inspect transformer T801 (fig. 71) for overheating and leaking. Do this immedately after the receiver has been turned off.

Section III. LUBRICATION AND WEATHERPROOFING

40. Lubrication

Lubrication is to be performed by trained maintenance personnel. Lubrication instructions are given in paragraph 133.

41. Weatherproofing

a. General. Signal Corps equipment, when operated under severe climatic conditions such as prevail in tropical, arctic, and desert regions, requires special treatment and maintenance. Fungus growth, insects, dust, corrosion, salt spray, excessive moisture, and extreme temperatures are harmful to most materials.

b. Tropical Maintenance. The soldered connections in the receiver have been treated with a moistureproof and fungiproof varnish by the manufacturers. After repairs have been made to these connections, this type of varnish, if available, should be applied.

c. Arctic Maintenance. Special precautions necessary to prevent poor performance or total operational failure of equipment in extremely low temperatures are explained in TB SIG 66, Winter Maintenance of Signal Equipment, and TB SIG 219, Operation of Signal Equipment at Low Temperatures.

d. Desert Maintenance. Special precautions necessary to prevent equipment failure in areas subject to extremely high temperatures, low humidity, and excessive sand and dust are explained in TB SIG 75, Desert Maintenance of Ground Signal Equipment.

Section IV. TROUBLE SHOOTING AT ORGANIZATIONAL MAINTENANCE LEVEL

42. General

a. The trouble shooting and repairs that can be performed at organizational maintenance level (operators and repairmen) are necessarily limited in scope by the tools, test equipment, and replaceable parts issued. Accordingly, trouble shooting consists of determining such troubles as burned-out tubes and fuses.

b. Paragraphs 43 through 50 will assist in determining which of the subchassis of the receiver is at fault, and in localizing the fault in that assembly to the defective stage or part, such as a tube or fuse. Repair will be limited to the replacement of those parts included in the running spares.

c. Trouble shooting at an organizational level is concerned with the localizing of defective parts that are readily replaceable at an organizational level (tubes, fuses, cables, etc.). If the fault can be determined through organizational procedures, corrective measures are indicated. If the fault cannot be determined through organizational procedures, reference is made to the necessary field maintenance instructions, which indicates the need for trouble shooting at a field maintenance level.

43. Visual Inspection

a. When the receiver fails to operate and the reason is not clear, check the items in *b* below before starting a detailed examination. If possible, obtain information from the operator of the receiver concerning performance at the time the trouble occurred.

b. Failure of the receiver to operate properly or not at all may be caused by one or more of the following faults:

(1) Improperly connected, worn, or broken power cable.
(2) Improperly connected, worn, or broken speaker or headset cord.
(3) Burned-out fuse. Be sure a fuse of proper value (par. 13) is used, especially when the receiver is operated from a 230-volt source.
(4) Grounded or broken antenna or antenna lead-in.
(5) Improperly connected antenna lead-in.
(6) Defective tube.
(7) Improperly connected or seated external or internal interconnecting cables.
(8) Loose connection on terminal strips on rear panel. Be sure to check the ground connection at the rear of the receiver.

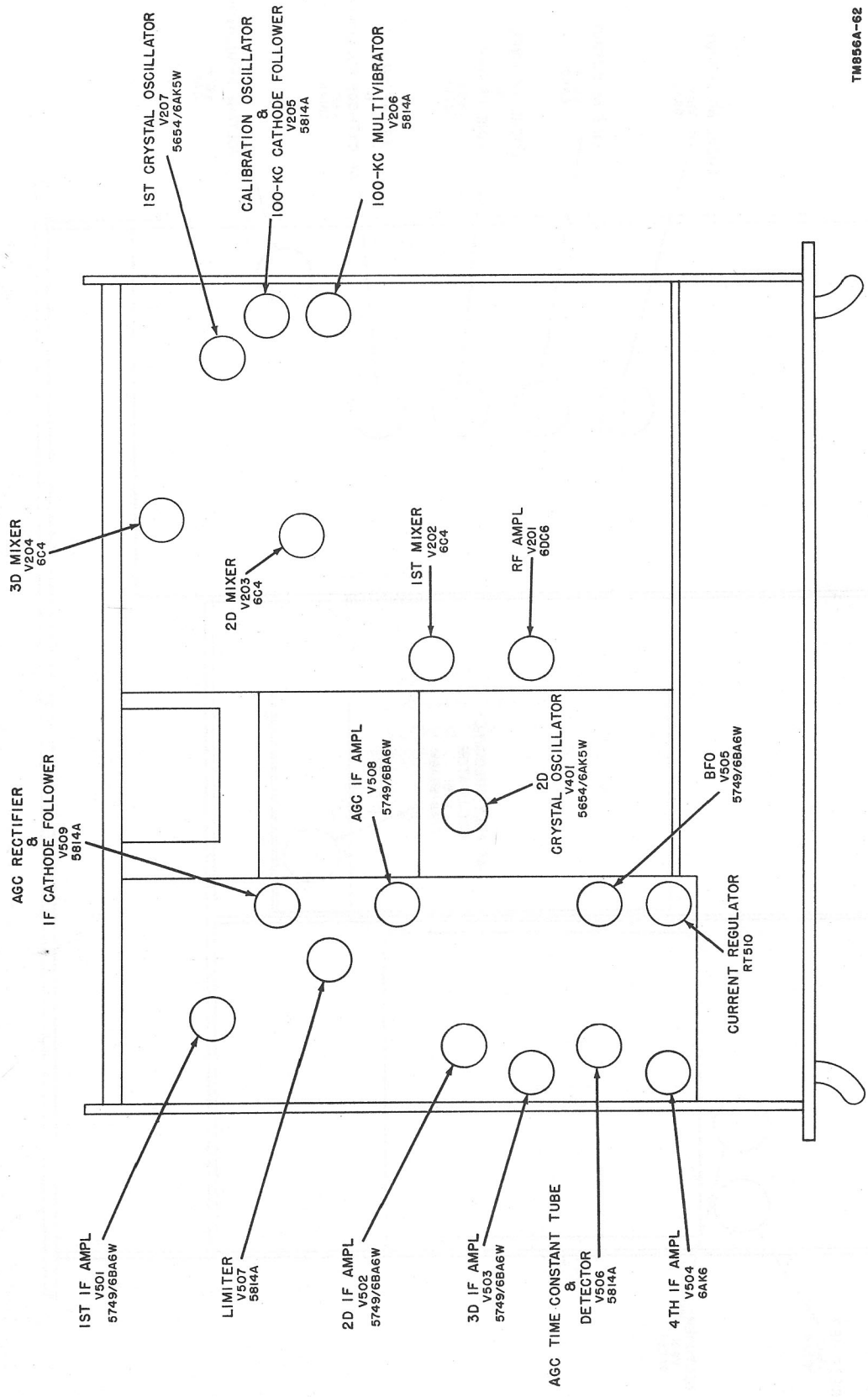

Figure 15. Radio Receiver R-390A/URR, top deck, tube location.

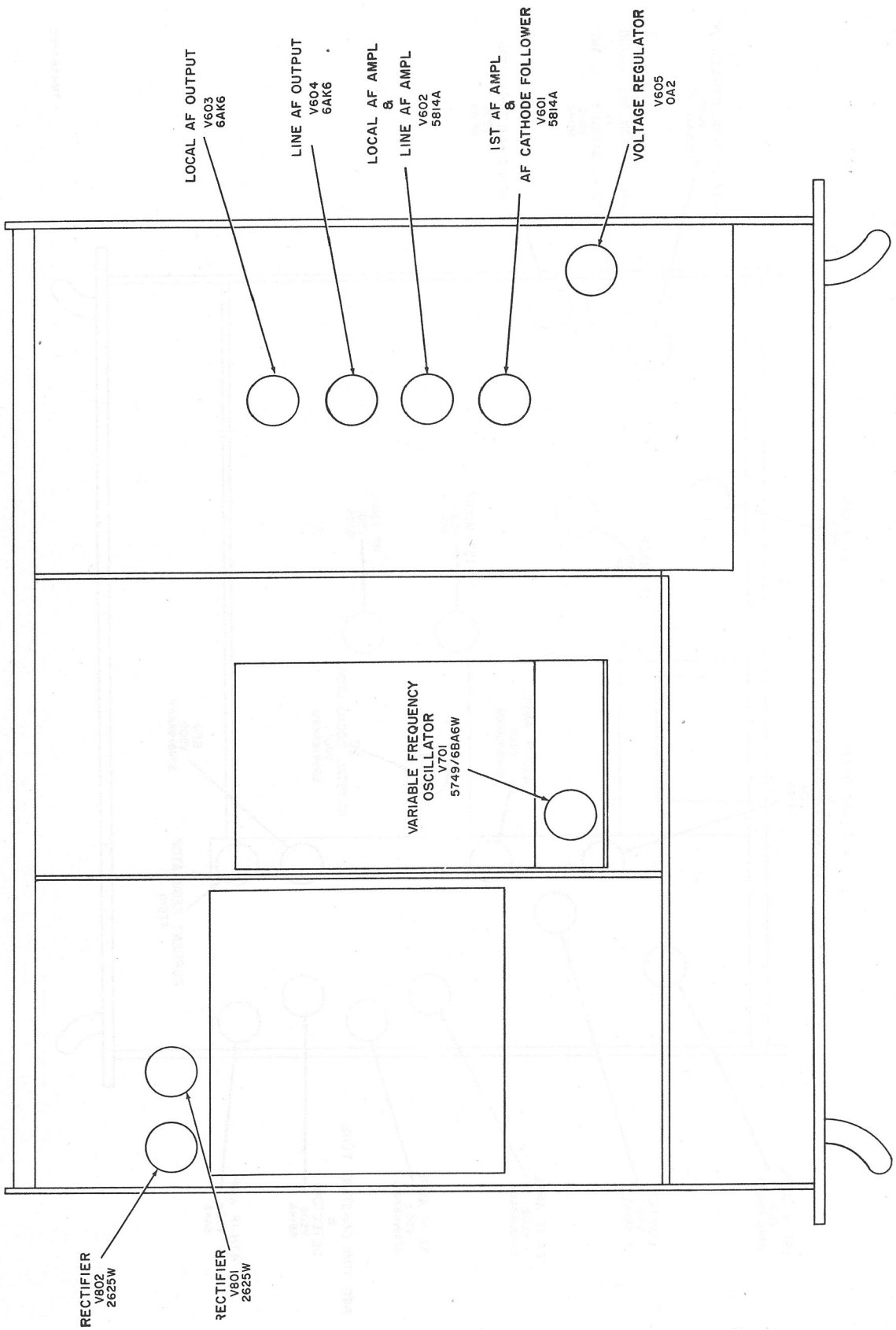

Figure 16. Radio Receiver R-390A/URR, bottom deck, tube location.

44. Checking for B Plus Shorts

a. One of the most damaging troubles in the receiver is a B plus short circuit. This trouble causes excessive current to flow through the rectifier tubes and the various B plus circuits. Such a short circuit can cause the rear panel AC 3 AMP fuse to blow, damage rectifiers tubes V801 and V802, or burn out circuit resistors. Prior to applying ac power to the receiver, check for B plus shorts as follows:

(1) Disconnect the receiver from the ac power source. Remove V801 from the power-supply subchassis.

(2) Connect the multimeter between ground and pin 3 or 8 of tube socket XV801.

(3) With the receiver still disconnected from the ac power source, turn the FUNCTION switch to each of its positions and observe the dc resistance of the B plus circuits for each position of this switch. If the dc resistance is less than 40,000 ohms, a B plus short exists.

(4) With the FUNCTION switch on AGC or MGC, turn the BFO switch to ON. If the dc resistance is less than 40,000 ohms, a B plus short exists.

(5) Replace rectifier tube V801 and remove V802. Once again check the dc resistance from ground to pin 3 or 8 of XV802. This checks V801 for a short circuit.

b. If the above tests reveal a B plus short, trouble-shooting at a field maintenance level is required.

45. Over-all Operational Test

A rapid check of the receiver should be made when making frequency changes or when performing daily preventive maintenance. The procedures given in *a* through *e* below form a rapid check of the entire receiver except the primary of the antenna transformer.

a. Set the controls as follows:

Control	*Position*
RF GAIN	10
FUNCTION switch	CAL
BFO switch	ON
BFO PITCH control	+2
LINE GAIN control	5
LOCAL GAIN control	10
BANDWIDTH switch	4 KC
AUDIO RESPONSE switch	WIDE
AGC switch	MED
LIMITER control	OFF
LINE METER switch	0

b. Disconnect the antenna. Tune the KILOCYCLE CHANGE control to any 100-kc point for maximum indication on the CARRIER LEVEL meter.

c. Starting at 00, turn the MEGACYCLE CHANGE control to each of the bands. Adjust the ANT TRIM control for maximum indication on the CARRIER LEVEL meter for each band. Listen to the signal produced by the calibration oscillator. It should be approximately the same level on all bands. The minimum indication on the LINE LEVEL meter should be 0 vu on all bands.

d. This test will indicate which bands may be inoperative. Alignment of these bands or circuit repair is normally required to return them to normal sensitivity. These operations will be done at a field maintenance level.

e. Turn the BFO switch to OFF and listen for hum in the headset or loudspeaker. A slight hum is normal, but excessive hum indicates the need for trouble shooting in the power-supply circuits at a field maintenance level.

46. Checking Receiver Performance With Noise

An effective method of checking receiver performance and determining in which subchassis possible causes of trouble exist is to perform certain operations while listening to the noise produced by the receiver. Perform the operations in *a* through *e* below with the antenna disconnected from the receiver. Adjust the controls to produce audible noise in the loudspeaker or headset. Set the FUNCTION switch at MGC, the BANDWIDTH switch at 16 KC, and the BFO switch at OFF.

a. Af Noise Test. While listening to the noise, ground the DIODE LOAD terminal on the rear panel (terminal 14). Terminal 16 is a convenient ground connection. The noise should be greatly reduced. Make the same check while listening to the remote audio output or while watching the LINE LEVEL meter. If the noise at both audio outputs almost disappears when the DIODE LOAD terminal is grounded, the audio circuits may be considered to be operating properly. If only the local output is reduced, check tubes V602 and V604 and the seating of connector P120 (fig. 57). If only the remote output is affected, check tubes V602 and V603 and the seating of connector P119 (fig. 57). If neither output is affected, check tubes V507 and V601. If tube replacement is not effective, it will be necessary to trouble shoot the af subchassis at a field maintenance level.

b. If Noise Test. Set the BANDWIDTH switch at 16 KC. With the other controls set for audible noise, set the BANDWIDTH switch successively at each lower position, listening to the noise. The noise should decrease at each position, until it can hardly be heard in the .1 KC position. If there is little or no change in noise output as the switch is rotated, check tubes V501 through V504. If the tubes are not defective, further trouble shooting of the if subchassis at a field maintenance level will be necessary.

c. Noise at Grid Test Points. Set the multimeter to the highest resistance range. Connect one multimeter lead to the chassis and, in turn, touch the prod on the other lead to grid test points E211, E210, E209, and E208, in that order (fig. 58). A click should be heard each time the prod touches the test point. If no click is heard, check the tube closest to the check point. Be sure that all connectors are seated firmly in their receptacles.

d. Rf Tuner Noise Test. Starting with the megacycle frequency indicator at 02, turn the MEGACYCLE CHANGE control through its range to the highest frequency, listening to the noise in the headset or loudspeaker. There should be a sharp and pronounced increase in noise as the control is seated in each detent position. Across the tuning range, some adjustment of the ANT TRIM control will be necessary to produce maximum noise. Between detent settings, the noise should show a pronounced drop in level. From one detent setting to the next (except between the settings where rf coil ranges are to be switched), the noise level should be almost constant. Rf coils are switched between the following settings: 03 and 04, 07 and 08, 15 and 16. If noise at any point across the range is not maximum with the knob in the detent position, mistracking at that point is possible. Adjustment at a field maintenance level is required. The rf and variable if alignment should be checked (par. 142, 143, and 144). If the noise does not drop between detent settings, check for excessive if gain (par. 95). If noise is less at one detent setting, check the over-all gain (par. 94) and the adjustment of the crystal-oscillator trimmer capacitors (par. 140*e*).

e. Antenna Circuit Noise Tests. Rotate the ANT TRIM control. The noise should peak at one particular point. Ground the center contact of the ANTENNA UNBALANCED connector (J103). A click should be heard and the noise should drop sharply. Ground both contacts of the ANTENNA BALANCED connector (J104). A click should be heard and the noise should drop sharply. If the receiver does not pass these tests, check the antenna relay, the connectors on the antenna relay box, and the sections of the rf band change switch that connect to transformers T201 through T206.

47. Electron Tube Testing Techniques

a. Inspect all interior cables, connections, and the general condition of the equipment before removing the electron tubes.

b. Isolate the trouble to a particular subchassis of the receiver (par. 46).

c. If Electron Tube Test Set TV-7/U or equivalent is available, remove and test one tube at a time. Substitute new tubes only for those that are defective. Tubes that are shorted or contain heater-to-cathode leakage should be discarded immediately, because these conditions can upset the automatic gain control circuit, as well as other receiver functions, and produce misleading test results.

d. If a tube tester is not available, trouble shoot by the tube substitution method.

(1) Substitute a new tube for an original tube. If no change occurs in the operation of the receiver, replace the new tube with the original. Similarly, check

each original tube, in turn, until the equipment becomes operative or until all suspected tubes have been tested and the need for further trouble shooting is indicated.

(2) Some circuits, for example oscillator circuits, (V206, V207, V401, V505, and V701) may function with one tube and not another, even though both tubes are new.

(3) *Do not leave a new tube in a socket if the receiver operates properly with the original tube.*

(4) If a replacement tube soon becomes defective, further trouble shooting is necessary. The section containing the tube should be tested for defective component parts.

(5) If tube substitution does not correct the trouble, *reinsert the original tubes in the original sockets before forwarding the defective equipment for higher echelon repair.*

(6) If another receiver of the same type is available, refer to the instructions given in *g* below.

e. As a general rule, discard tubes only in the cases given in (1) and (2) below. Do not discard them merely because they fall on or slightly above the lowest acceptable value when tested in a tube tester. Do not discard tubes merely because they have been used for some time. Satisfactory operation in a circuit is the final proof of tube quality. The tube in use may work better than a new tube.

(1) Discard tubes when a test in a tube tester or other instrument shows that the tube is defective.

(2) Discard tubes when the defect can be plainly seen, such as a broken glass envelope or a broken connecting prong.

f. Be careful when withdrawing a miniature tube from its socket. Do not rock or turn it; pull it straight out. The variable-frequency ocsillator (vfo) tube shield (V701) is held in place by a special clamp. Be sure that the metal insert is in place when replacing the shield. Straighten the pins with the proper pin straightener, if one is available, before replacing tubes in the receiver.

g. Tune a similar receiver, which is in good operating condition, to a voice signal that is not subject to fading; a signal on one of the lower frequency bands is preferred. Turn the FUNCTION switch to AGC and the RF GAIN control to 10. Make the substitutions from the faulty receiver to a corresponding position in the good receiver, one tube at a time; gently tap the tube under test; and, if noise or abnormal change in volume is observed, replace the tube. A considerable decrease in indication on the CARRIER LEVEL meter or a noticeable decrease in volume or quality of the signal emitted from the speaker or headset indicates a weak or otherwise defective tube; however, different test results for the following tubes must be observed.

(1) When tubes V508 and V509A (agc circuit) are weak, a decreased indication on the CARRIER LEVEL meter with an increase in volume may be noted. A weak V506A (agc time constant circuit) will cause an increase in indication on the CARRIER LEVEL meter without any change in volume. A weak V509B (if cathode follower) will produce a weak signal at the IF OUTPUT connector (J116). After testing tube V507 (noise limiter) in the usual manner, tune the receiver away from the test signal, and, if noise is received, rotate the LIMITER control clockwise; the tubes under test and tubes that are known to be good should be equally effective in reducing noise. After testing these tubes, return the LIMITER control to OFF, and retune the receiver to the test signal. To test V505, turn the BFO switch to ON, and, while turning the BFO PITCH control through its entire range, listen for the beat note.

(2) Test tube V801 and V802 of the power-supply subchassis and V701 of the vfo subchassis by listening to the audio output and observing the indication on the CARRIER LEVEL meter (*g* above). Visually inspect V605; if it does not glow properly, it will cause abnormal voltage on the +150-volt regulated line. When testing tubes V205 and V206, turn the FUNCTION switch to CAL, tune through several

100-kc points, and observe the indication on the CARRIER LEVEL meter.

(3) Test tubes in the af circuits by listening to the volume and quality of the output signal of the af channels. When testing tubes V602A and V603 (local af amplifier), listen to the output signal of the local audio channel. When testing tubes V602B (line af amplifier) and V604, listen to the output signal from the balanced-line circuit and observe the indication on the LINE LEVEL meter. Tube V601 is common to both the local and line af channels. Generally, small changes in LINE LEVEL meter indication may be expected because of certain differences among tubes.

48. Interchangeable Tubes

Do not substitute a type 6C4W tube for a 6C4 tube. The differences in characteristics are such that the type 6C4W will not operate properly in the receiver.

49. Trouble Shooting by Using Equipment Performance Check List

a. General. The equipment performance check list (below) will help the repairman to locate trouble in the receiver. The list gives the items to be checked, the conditions under which the item is checked, the normal indications and tolerances of correct operation, and the corrective measures to be taken. To use this list, follow the items in numerical sequence.

b. Action or Condition. For some items, the information given in the *Action or condition* column consists of various switch and control settings with which the items are to be checked. For other items, it represents an action that must be taken to check the normal indication given in the *Normal indications* column.

c. Normal Indications. The normal indications listed include the visible and audible signs that the repairman should observe when he checks the items. If the indications are not normal, the operator or repairman should apply the recommended corrective measures.

d. Corrective Measures. The corrective measures listed are those that the operator or repairman can make without turning in the equipment for repairs. A reference in the table to a paragraph relating to field maintenance indicates that the trouble cannot be corrected during operation and that trouble shooting by an experienced repairman is necessary. If the recommended corrective measures do not produce results, further trouble shooting is necessary.

50. Equipment Performance Check List

	Item No.	*Item*	*Action or condition*	*Normal indications*	*Corrective measures*
PREPARATORY	1	Antenna	Lead-in wire connected.		
	2	Loudspeaker or headset	Loudspeaker connected to LOCAL AUDIO terminals 6 and 7 or headset connected to PHONES jack.		
	3	600-ohm line	Connected to terminals 10 and 13. If 600-ohm line is not available, connect headset to terminals for test purposes.		
	4	Power cord	Connected to ac power source.		
	5	AUDIO RESPONSE switch	Set at WIDE.		
	6	BANDWIDTH switch	Set at 8 KC.		
	7	RF GAIN	Set at 10.		
	8	LOCAL GAIN control	Set at 5.		

50. Equipment Performance Check List (cont.)

	Item No.	Item	Action or condition	Normal indications	Corrective measures
EQUIPMENT PERFORMANCE	9	FUNCTION switch	Turn to AGC.	Dial lamps light.	Check power cord. Check dial lamps and AC 3 AMP fuse. Refer to paragraph 43.
				Rushing noise or signal heard in speaker or headset.	Test tubes. Check connectors between subchassis. Refer to paragraphs 45 through 47.
	10	MEGACYCLE CHANGE control	Set to each band, in turn	Normal signal output on each band.	Rotate control several times to clean switch contacts. Refer to paragraphs 96 and 97.
	11	KILOCYCLE CHANGE control	Tune across a band.	Signals received. CARRIER LEVEL meter indicates strength of received signals.	Refer to paragraphs 96 and 97.
	12	ANT TRIM	Rotate control.	Obtain peak indication on CARRIER LEVEL meter for each band.	Refer to paragraphs 96 and 152.
	13	LOCAL GAIN control	Rotate control in either direction.	Volume at loudspeaker or headset increases or decreases.	Refer to paragraph 99.
	14	LINE GAIN control	Rotate control.	Output level to 600-ohm line or headset and LINE LEVEL meter increases or decreases.	If headset level varies and pointer of meter is sticking, tap meter lightly.
					If local output is satisfactory, but line output weak, check tubes V602 and V604. Refer to paragraph 100.
	15	RF GAIN control	Rotate control.	Audio output and CARRIER LEVEL meter indication increases or decreases.	Refer to paragraph 96.

50. Equipment Performance Check List (cont.)

	Item No.	Item	Action or condition	Normal indications	Corrective measures
EQUIPMENT PERFORMANCE	16	FUNCTION switch	Turn to MGC.	With no signal input, noise level should increase slightly and CARRIER LEVEL does not indicate.	Refer to paragraph 96.
			Turn to AGC, and tune through several different signals.	Output volume nearly constant	Refer to paragraph 96.
			Turn to CAL, and then operate KILOCYCLE CHANGE control.	Deflection on CARRIER LEVEL meter at each 100-kc reading.	Reset ANT TRIM control. Refer to paragraphs 96, 97, and 120.
	17	LIMITER control	Turn clockwise.	Noise peaks are reduced in amplitude.	Refer to paragraph 96.
	18	BREAK IN relay switch	Turn to ON. Short BRK IN terminal 9 on rear panel to ground momentarily.	LINE LEVEL Meter is disabled and break-in relay functions to silence receiver.	Refer to paragraph 96.
	19	LINE METER switch	Turn to +10.	Line level is 10 vu above LINE METER indication.	Refer to paragraph 116.
			Turn to 0.	LINE METER indicates the line level controlled by the LINE GAIN control.	
			Turn to -10.	Line level is 10 vu below LINE METER indication.	
			Turn to OFF.	LINE LEVEL meter is disconnected. Line audio output is still connected.	
	20	BFO control and BFO PITCH control	Turn BFO control to ON. Tune in a cw signal, and vary the BFO PITCH control.	Tone of signal varies.	Refer to paragraphs 96 and 97.
	21	BANDWIDTH switch	Turn from 16 kc to .1 KC.	Selectivity becomes sharper and noise decreases. Only low-frequency audio tones are heard in the counterclockwise positions.	Refer to paragraphs 96 and 110.

50. Equipment Performance Check List (cont.)

	Item No.	*Item*	*Action or condition*	*Normal indications*	*Corrective measures*
EQUIP.	22	AUDIO RESPONSE switch	Operate through both positions.	Permits amplification of nearly full af range in WIDE position, and 800 cps in SHARP position.	Refer to paragraphs 96 and 111.
PERF.	23	OVENS switch	Turn to OFF.	Oscillator ovens are turned off.	
	24	FUNCTION switch	Turn to STAND BY	Receiver is silent. Filament circuits and oscillator circuits are kept on for immediate reception.	
STOP	25	FUNCTION switch	Turn to OFF.	Turns off all receiver circuits.	

CHAPTER 5
THEORY

Section I. THEORY OF RADIO RECEIVER R-390A/URR

51. General

a. Radio Receiver R-390A/URR provides reception of cw, mcw, and am (including single-sideband) signals over a continuous frequency range of .5 to 32 mc. The receiver is a superheterodyne type with multiple frequency conversion. Double conversion is used when the receiver operates from 8 to 32 mc and triple conversion from .5 to 8 mc.

b. Tuning is linear, thus allowing constant frequency spread throughout the range. This tuning is accomplished by the insertion of powdered-iron cores into the rf and variable if coils at a rate controlled by a complex mechanical arrangement of gears, shafts and cams. The frequency is indicated by a counter-type indicator, allowing a frequency-reading accuracy of 300 cps or better over the entire range of the receiver.

52. Block Diagram of Radio Receiver R-390A/URR

a. Figure 17 shows the path of the receiver signals from the antenna input to the audio output and if output. Figure 106 is a complete schematic diagram of the receiver.

b. Rf signals are fed into the receiver by either a balanced two-wire antenna such as a doublet, or an unbalanced antenna such as a whip or random-length wire antenna. Antenna relay K101 disconnects and grounds the antenna during standby, calibration, or break-in operation. When K101 is not energized, the balanced antenna is connected to the input of one of the antenna transformers, T201 through T206, which is selected by the MEGACYCLE CHANGE switch. The transformers are tuned by the KILOCYCLE CHANGE and/or the MEGACYCLE CHANGE tuning dials. The output of these tuned circuits is fed into rf amplifier V201. The signal from the unbalanced antenna is fed directly to the grid circuit of the rf amplifier.

c. The calibration circuit, consisting of 200-kc crystal calibration oscillator V205A, 100-kc multivibrator V206, and 100-kc cathode follower V205B, injects 100-kc markers into the input circuit of rf amplifier V201. When the FUNCTION switch is in the CAL position, B+ is connected to the calibration circuit.

d. Rf amplifier V201 amplifies the signals from the antenna before they are fed to first mixer V202. Six tuned circuits are selected by a switch that is connected to the MEGACYCLE CHANGE control. The tuned circuits are adjusted by the KILOCYCLE CHANGE and/or the MEGACYCLE CHANGE controls. The frequency range of tuned circuits Z201 through Z206 is .5 to 32 mc.

e. Signals from .5 to 8 mc are coupled from rf amplifier V201 and fed into the input circuit of first mixer V202. The 8- to 32-mc signals from V201 are switched around the first mixer and fed directly into second mixer V203. When the receiver is operated between .5 and 8 mc, the first mixer mixes the rf signals with a 17-mc signal from first crystal oscillator V207. The output (sum) frequency is the first variable if signal, and its frequency varies from 17.5 to 25 mc. Tuned circuit Z213 is a triple-tuned device that is permeability tuned as the MEGACYCLE CHANGE and the KILOCYCLE CHANGE controls are operated.

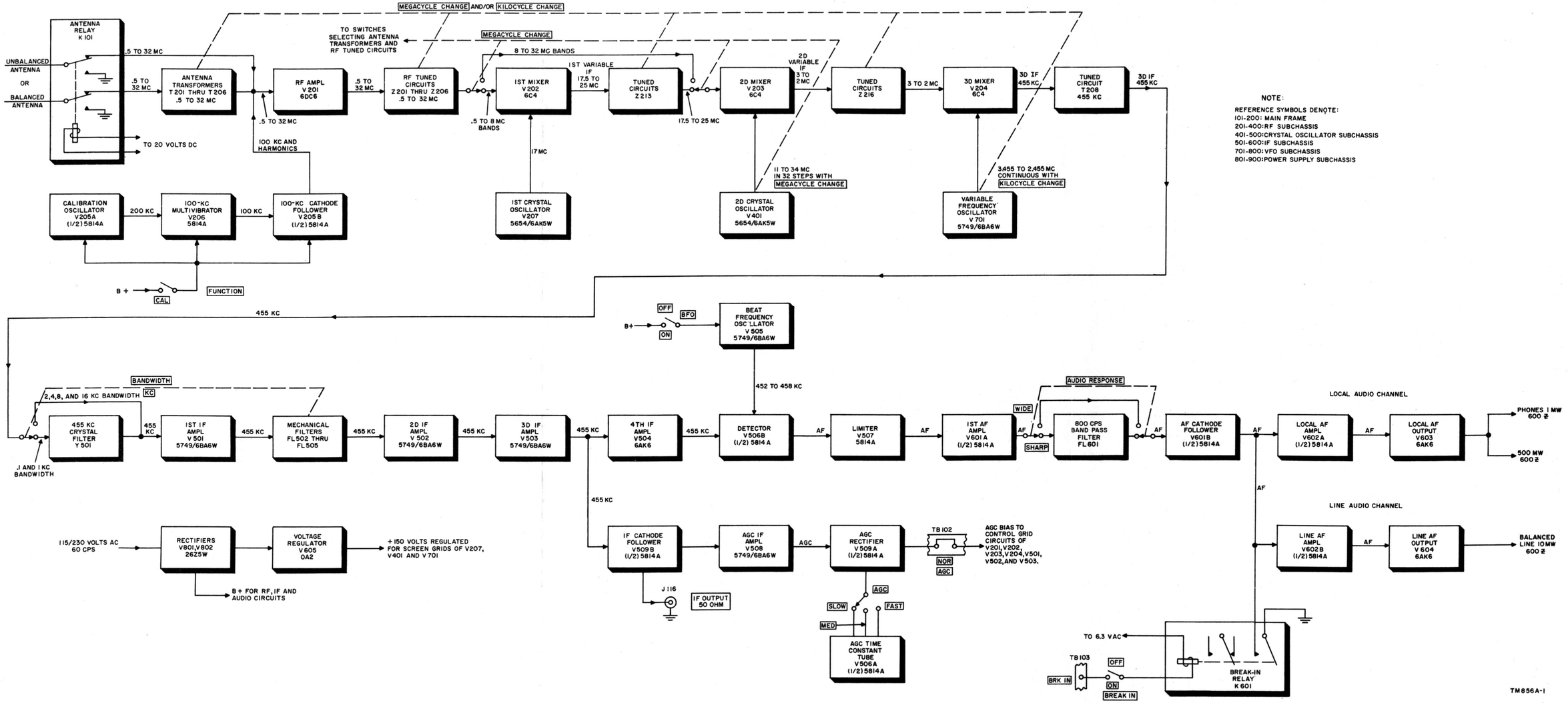

Figure 17. Radio Receiver R-390A/URR, block diagram.

f. The 17.5- to 25-mc output of the first mixer stage (when the receiver is tuned from .5 to 8 mc) or the 8- to 32-mc output from rf amplifier V201 (when the receiver is tuned from 8 to 32 mc) is selected by the operation of the MEGACYCLE CHANGE control and fed into second mixer V203. Also fed into V203 is a signal from second crystal oscillator V401. The output frequency of V401 is changed as the MEGACYCLE CHANGE control is operated so that the difference between signal frequency and oscillator frequency is always between 2 and 3 mc. When the frequency reading on the receiver dial is between 15 and .999 mc, V401 feeds a 20-mc signal into V203. When the frequency is between 1 mc and 1.999 mc, V401 feeds a 21-mc signal into V203. The output frequency of V203 thus varies downward from 3 to 2 mc, except on the .5- and 1-mc band, where the output frequency of V203 varies between 2.5 and 2 mc. This is the second variable if signal. Another set of triple-tuned coils, Z216, tunes the output of V203 as the KILOCYCLE CHANGE control is operated.

g. The 3- to 2-mc output of the second mixer and its tuned output circuit Z216 is fed into the input circuit of third mixer V204. This stage beats the 3- to 2-mc signal with a continuously variable signal from variable-frequency oscillator V701. This precision oscillator has accuracy comparable with a frequency standard and is controlled by the KILOCYCLE CHANGE control. The output of V204 is a fixed frequency of 455 kc. This is the third if.

h. The 455-kc signal is fed into or around 455-kc crystal filter Y501, as determined by the setting of the BANDWIDTH control. When this control is in the .1 KC or 1 KC position, the 455-kc signal is fed through crystal filter Y501, and in any other position it is bypassed around the filter directly to first if amplifier V501. The output of V501 is fed into one of four mechanical filters. The output from the selected filter is fed successively through the second, third, and fourth if amplifiers (V502, V503, and V504, respectively).

i. The output of the fourth if amplifier, V504, is fed into half-wave diode detector V506B and audio-frequency voltage is produced. This af signal is fed to the limiter stage V507, which clips off noise peaks that might render reception difficult.

j. Beat-frequency oscillator V505 generates and feeds signals variable in frequency from 452 to 458 kc to detector stage V506B. The resultant beat frequency is adjustable continuously from 0 to 3,000 cps whether the bfo is above or below the carrier signal. Setting the BFO switch to the ON position turns on the bfo.

k. The audio output from limiter V507 is fed to first af amplifier V601A. This stage amplifies the audio signal and passes it through or around 800-cps band-pass filter FL601, depending upon the setting of the AUDIO RESPONSE switch. The audio signal is then fed to af cathode follower V601B. This stage feeds the audio signals to the local and line audio channels. The local audio channel consists of local af amplifier V602A and local af output tube V603. This audio source is used for 600-ohm headsets, loudspeakers, or special uses. The line audio channel is similar to the local audio channel, consisting of line af amplifier V602B and line af output tube V604. The output provided matches a balanced 600-ohm line.

l. If signals (455 kc) present at the input to fourth if amplifier V504 are also fed to the input of if cathode follower V509B. This stage provides a 50-ohm source of 455-kc signals for use with a frequency-shift converter for teletypewriter operation. The IF OUTPUT connector for this type of service is located on the rear panel of the receiver. Tube V509B also feeds 455-kc signals into the agc circuit. The first tube of this circuit is agc if amplifier V508. This stage amplifies the 455-kc signal and feeds it to agc rectifier V509A. The rectifier stage rectifies the if signal into dc with amplitude in proportion to the average amplitude of the if signal. This agc bias is fed to the control grid circuits of V201 through V204 and V501 through V503. Tube V506A provides agc time constants of various durations when the AGC switch is set to various positions.

m. The B+ supply for the receiver is powered by a source of 115 or 230 volts alternating current (ac) at 60 cps. This ac power is changed into dc by rectifiers V801 and V802. A source of regulated 150 volts is provided by voltage regulator V605. This regulated voltage is used as a screen grid supply for V207, V401, and V701.

Section II. CIRCUIT ANALYSIS

53. General

Radio Receiver R-390A/URR consists of a main frame and six subchassis. These are the rf subchassis, variable-frequency oscillator (vfo) subchassis, crystal-oscillator subchassis, if subchassis, af subchassis, and the power-supply subchassis. The receiver is constructed on this basis for easier repair and replacement.

54. Antenna Circuit

(fig. 18 and 19)

The antenna circuit provides an efficient means of matching antennas of various characteristics to rf amplifier V201.

a. The BALANCED ANTENNA connector, J104, has a characteristic impedance of 125 ohms. It can accommodate two-wire antenna systems such as doublets with either twisted pair or coaxial transmission lines in the range from 50 ohms to twin-lead transmissions lines in the vicinity of 200 ohms without serious mismatch. It is also suitable for long wire antennas when one side of J104 is connected to ground. UNBALANCED ANTENNA connector, J103, is provided for whip antennas, long-wire antennas and random-length, single-wire antennas.

b. Antenna relay K101 is actually two relays operated as a single unit. During conditions of standby, calibration, or break-in operation, both sections of K101 are energized. Relay K101A opens the antenna coil primary circuit and grounds both of the wires of a two-wire antenna system. This opening and grounding of the antenna circuit attenuates the antenna signal input well over 40 decibels (db). Relay K101B accomplishes the opening and shorting feature for a single-wire antenna system, and the resulting attenuation is also well above 40 db. Resistor R121 drains static charges that may accumulate on a single-wire antenna because of mobile operation. Neon lamp I 103 ignites and shorts to ground momentarily whenever the radio frequency potential at J103 exceeds 80 to 90 volts. The source of relay power is approximately 20 volts dc from CR102, a bridge rectifier located in the rear section of the main frame of the receiver. The antenna signals that pass through the antenna relay circuit feed through miniature coaxial connectors J105 through J107, and P205 through P207 to MEGACYCLE CHANGE switch section S205, S202, and S201 respectively.

c. Figure 19 shows rf band switches S201 through S205 in the .5- to 1-mc. positions. This corresponds to the MEGACYCLE CHANGE dial setting of 00. The two-wire antenna signals are fed through S201 and S202 to the proper coil corresponding to the MEGACYCLE CHANGE dial setting. The two-wire antenna is balanced across the primary of antenna transformer T201 by series-connected capacitors C201A and C202. The lower capacitor is fixed and the upper is adjustable, which allows for optimum adjustment of the balance. When a whip or random-length single-wire antenna is used, connection is made to the appropriate coil through S205. Capacitor coupling through C204 provides good signal transfer between the antenna and coil for a wide variety of antennas. The secondary windings of the antenna transformers are permeability tuned by powdered-iron cores that are inserted into the coils by the mechanical tuning system.

d. Capacitor C201B is placed across the secondary of T201 for alignment purposes. It is aligned when ANT TRIM capacitor C225 is set at 0, its midposition. Generally, antennas contain a reactive component as well as a resistive component; ANT TRIM capacitor C225 is used for cancelling this reactive component to obtain maximum signal transfer from the antenna to the input of the receiver. The tuning effect of this control is more pronounced with an antenna connected through the UNBALANCED ANTENNA connector (fig. 19) because of the capacitor coupling (C204), which presents a capacitive reactance. Capacitor C203 is also connected across L213 in parallel with C201B and C225. This provides the balance of capacitance necessary to tune L213 to resonance at the correct frequency. Because a given amount of capacitance change will cause an ever increasing change in frequency as the resonant frequency increases, both sections of C225 are

connected across L213 (par. 80*e*). This is done to maintain the range of C225 consistent on all frequency bands.

e. The rotor of the rear section of switch S204 shorts adjacent secondary winding T203. This prevents transformer interaction that would otherwise occur. The front section of S204 selects the proper antenna transformer and connects it to the control grid of rf amplifier V201 through the grid-leak network of R233 and C255. Resistor R233 and capacitor C255 add to the negative bias from the agc line at the control grid of V201 when extremely strong signals cause grid current to flow. This short time-constant network improves the cross-modulation and blocking characteristics of the receiver when the interfering signal is strong enough to cause grid current to flow in V201. Test point E208 is located on the rf subassembly chassis for test and alignment purposes.

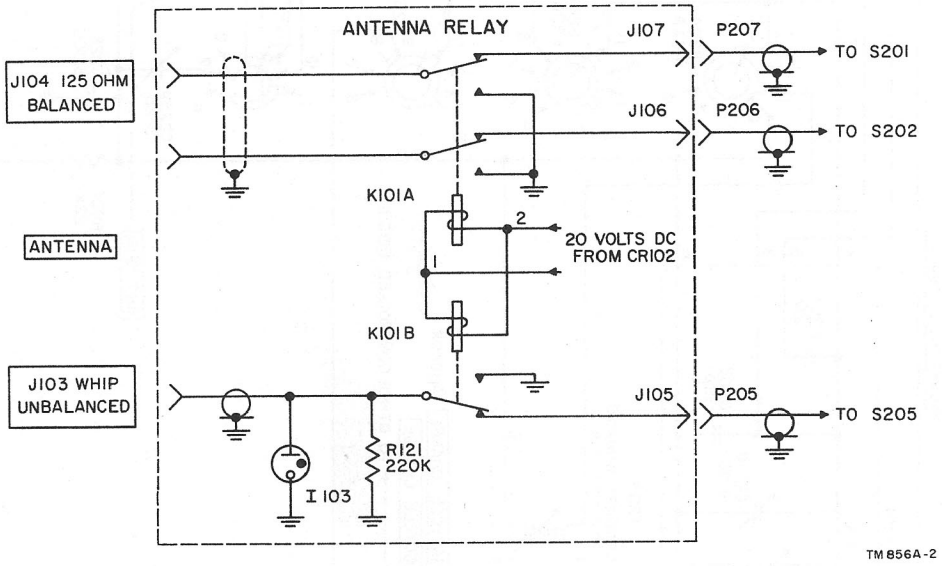

Figure 18. Antenna circuit, schematic diagram.

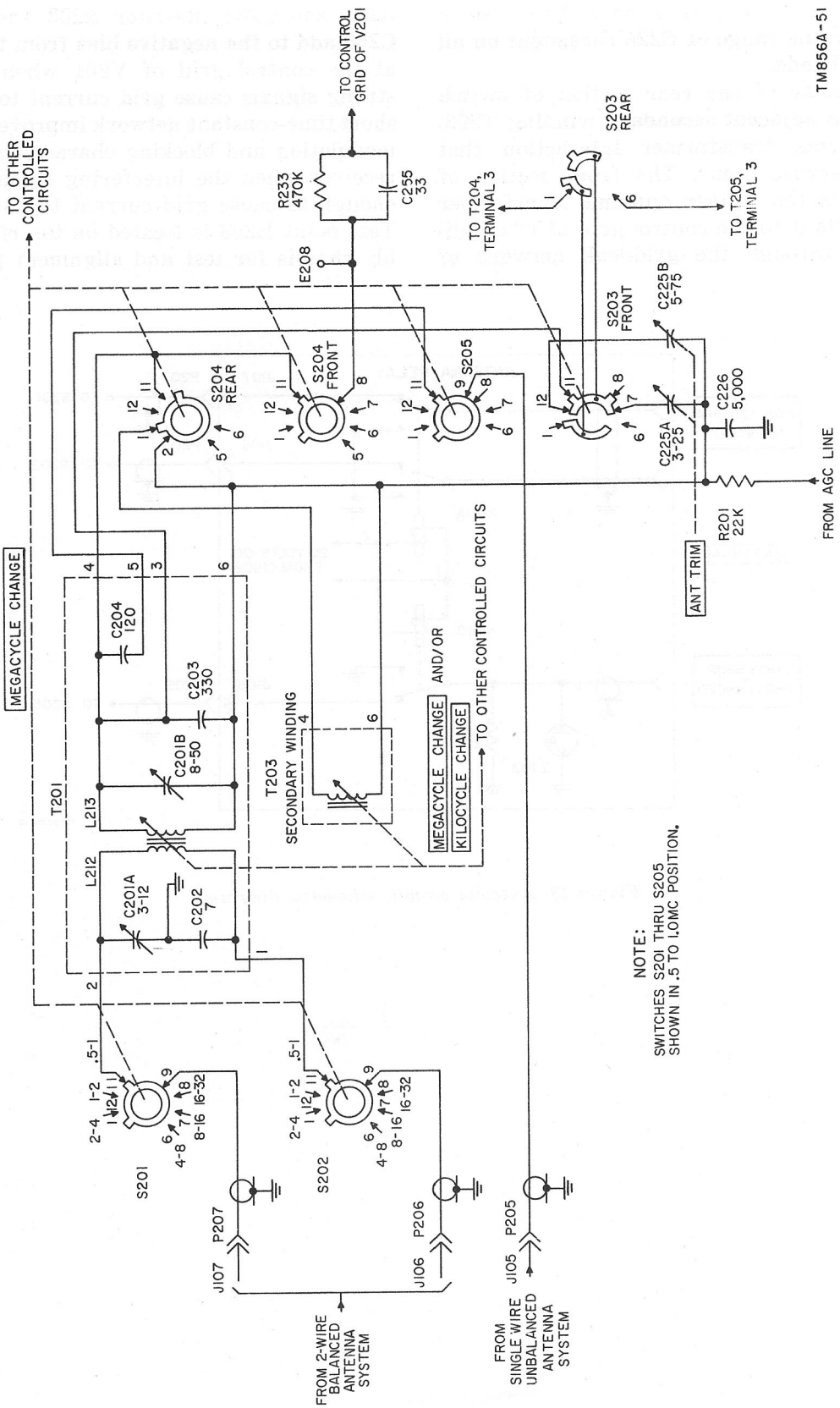

Figure 19, Switches S201 through S205, schematic diagram.

55. Rf Amplifier V201

(fig. 20 and 21)

A miniature-type 6DC6 tube is used to amplify the antenna signals before they are fed to first mixer V202. This stage also isolates the antenna circuit from the various signals generated by the oscillators in the receiver.

a. The grid circuit is returned to ground through the antenna coils and agc line when the FUNCTION switch is on AGC or directly to ground when the FUNCTION switch is on MGC (fig. 104 and 106). The antenna signals from the front section of switch S204 are fed through the grid-leak network of R233 and C255 to the control grid of V202. The 1-micromicrofarad (uuf) capacitor C228 couples 100-kc marker signals into the grid circuit when the FUNCTION switch is on CAL. Test point E208 is provided for testing and alignment.

b. Cathode resistor bias is provided by resistor R202 and RF GAIN control R103. This control adjusts the cathode bias and consequently the gain of rf amplifier V201. This control is especially useful for test purposes and during reception of cw and single-sideband signals. A low setting of this control during cw operation prevents strong signals from producing a *pounding* effect in the headset or speaker. RF GAIN control R103 is tied into the cathode circuit by the RF GAIN jumper on terminals 1 and 2 of TB102 at the rear of the receiver. This jumper can be removed and a remote rf gain control used (par. 15*d*[3]). Capacitor C227 bypasses the cathode to ground to prevent cathode circuit degeneration.

c. Screen grid voltage is obtained from the junction of voltage-divider resistors R203 and R204 from the switched rf-if B+ line to ground. Capacitor C229 is the screen grid bypass capaci-

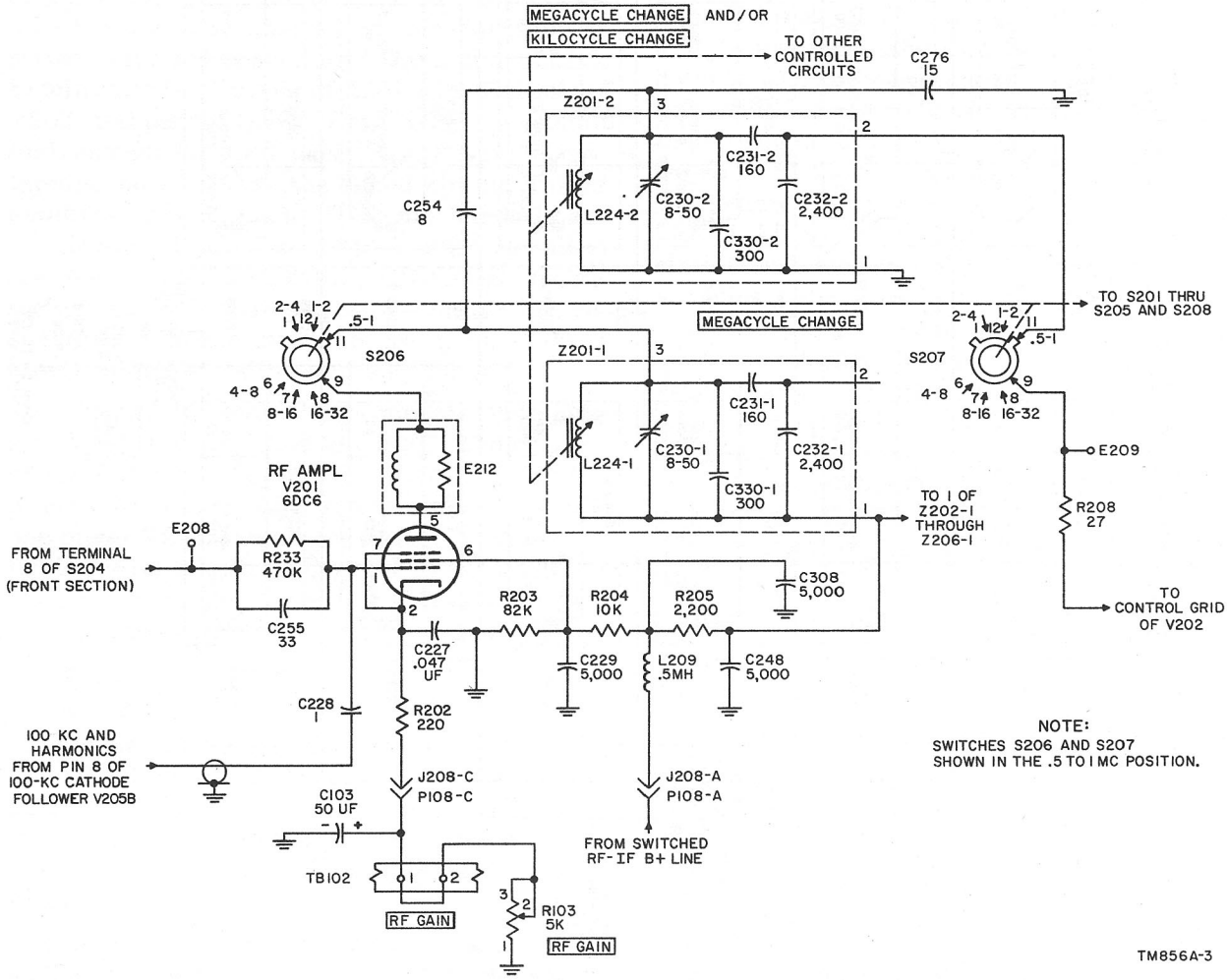

Figure 20. Rf amplifier V201, schematic diagram.

tor to ground. Plate voltage for V201 is obtained from the switched rf-if B+ line through the decoupling network of R205 and C248. Rf choke L209 and capacitor C308 provide additional isolation at the junction of R204 and R205. From the R205 point, the voltage is connected to the number 1 terminals of Z201-1 through Z206-1 (fig. 21 and 106, over-all receiver schematic diagram) and then through the No. 3 terminal of the tuned circuit selected by switch S206. Parasitic suppressor E212 is a small carbon resistor with a few turns of wire wound in

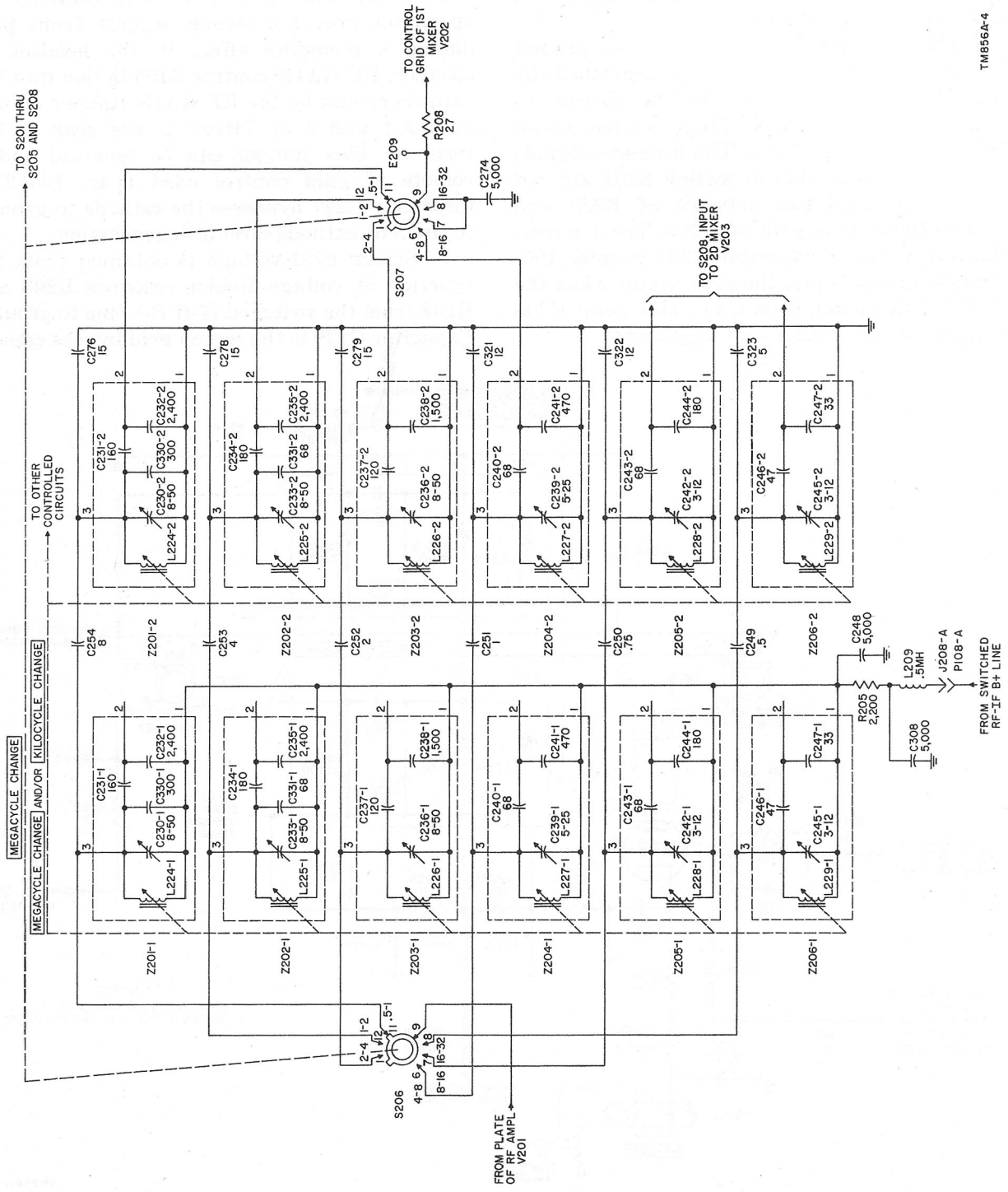

Figure 21. Switches S206 and S207, schematic diagram.

parallel with the resistor. This device presents a high impedance to parasitic oscillations in the multimegacycle range.

d. Switch section S206 of the MEGACYCLE CHANGE switch selects one of the six tuned circuits Z201-1 through Z206-1 (fig. 21 and 106), depending upon the setting of the MEGACYCLE CHANGE control. The coils are permeability tuned (by the KILOCYCLE CHANGE and/or the MEGACYCLE CHANGE controls) by ferrite slugs inserted into the coils. The variable capacitors and the fixed capacitors in Z201-1 and Z201-2 resonate with the coils over the .5 to 1-megacycle range. Capacitor C254 couples the signal from Z201-1 to Z201-2. The value of this capacitor is such that the coupling is slightly less than critical. Tuned circuit Z201-2 is similar to Z201-1 except that capacitor C276 is connected across L224-2 (externally) to compensate for the plate capacitance of previous stage V201. The control grid circuit of first mixer V202 is connected at the junction of series-connected capacitors C231-2 and C232-2, to minimize the loading of Z201-2 by first mixer V202, and permit the Q of the circuit to remain high enough for good selectivity. By use of this tapping down across the tuned circuit, the rf amplifier gain on each of the six bands is approximately 15 db. The desired tuned circuit is selected by MEGACYCLE CHANGE switch section S207 through parasitic-suppressing resistor R208 to the mixer control grid. E209 is a test point for testing and alignment.

e. Figure 21 shows the complete switching system of switches S206 and S207. The outputs of Z205-2 and Z206-2 (fig. 106) are routed around first mixer V202 and fed directly to second mixer V203. Double conversion, rather than triple conversion, is used on the 8- to 16-mc and 16- to 32-mc bands to keep the second variable intermediate frequency between 3 and 2 mc.

56. First Mixer V202
(fig. 22)

This stage uses a miniature triode type 6C4 tube. First mixer V202 beats the .5- to 8-mc signals from rf amplifier V201 with a 17-mc signal from first crystal oscillator V207. This develops the first variable if, and its range is from 17.5 to 25 mc.

a. The grid circuit of V202 is returned to ground through grid resistor R231, the decoupling network of R232 and capacitors C273 and C284, and rf choke L208, and then through the agc circuit when the FUNCTION switch is on AGC, and directly to ground when the FUNCTION switch is on AGC, and directly to ground when the FUNCTION switch is on MGC (fig. 104). Resistor R208 is a parasitic-suppressing resistor, and test point E209 is provided for testing and alignment. The cathode of V202 is returned to ground through the bias resistor R209 bypassed by C277, through connectors P221 and J221, which are miniature coaxial types, and finally through the secondary winding of the rf output transformer of first crystal oscillator V207. The cathode is the point at which the 17-mc signal is injected into the mixer stage. Plate voltage for V202 is fed from the switched rf-if B+ line through the decoupling network of R212 and C280, rf choke coil L209, bypass capacitor C308, and L232-1 of Z213-1.

b. The output circuit of V202 tunes to the sum frequency of the control grid and cathode signals. The cathode receives a fixed 17-mc signal, while the control grid receives signals within the range of .5 to 8 mc. The plate circuit is tuned from 17.5 to 25 mc, the first variable intermediate frequency range. Tuned circuits Z213-1, Z213-2, and Z213-3 form a triple-tuned circuit with loose coupling between the coil assemblies. Capacitors C281 and C282 provide this loose coupling. Trimmer capacitors C283-1 C283-2, and C283-3, coils L232-1, L232-2, and L232-3, and fixed capacitors C318, C329, and C334 across their respective coil assemblies form the tuned circuits. The trimmer capacitors are set during alignment. The coils are permeability tuned by the MEGACYCLE CHANGE control and/or the KILOCYCLE CHANGE controls.

c. The rear section of switch S208 shorts the output of tuned circuits Z213-3 to ground and opens the plus 150-volt regulated power source to the first crystal-oscillator screen grid when the receiver is tuned above 8 mc. The front section of switch S208 feeds the 17.5- to 25-mc. signal from Z213-3 to the control grid of second mixer V203 through parasitic-suppressing resistor R214 when the receiver is tuned to the .5- to 1-mc, 1- to 2-mc, 2- to 4-mc, or 4- to 8-mc range. When the front section of S208 is switched to the 8- to 16-mc range, the output of

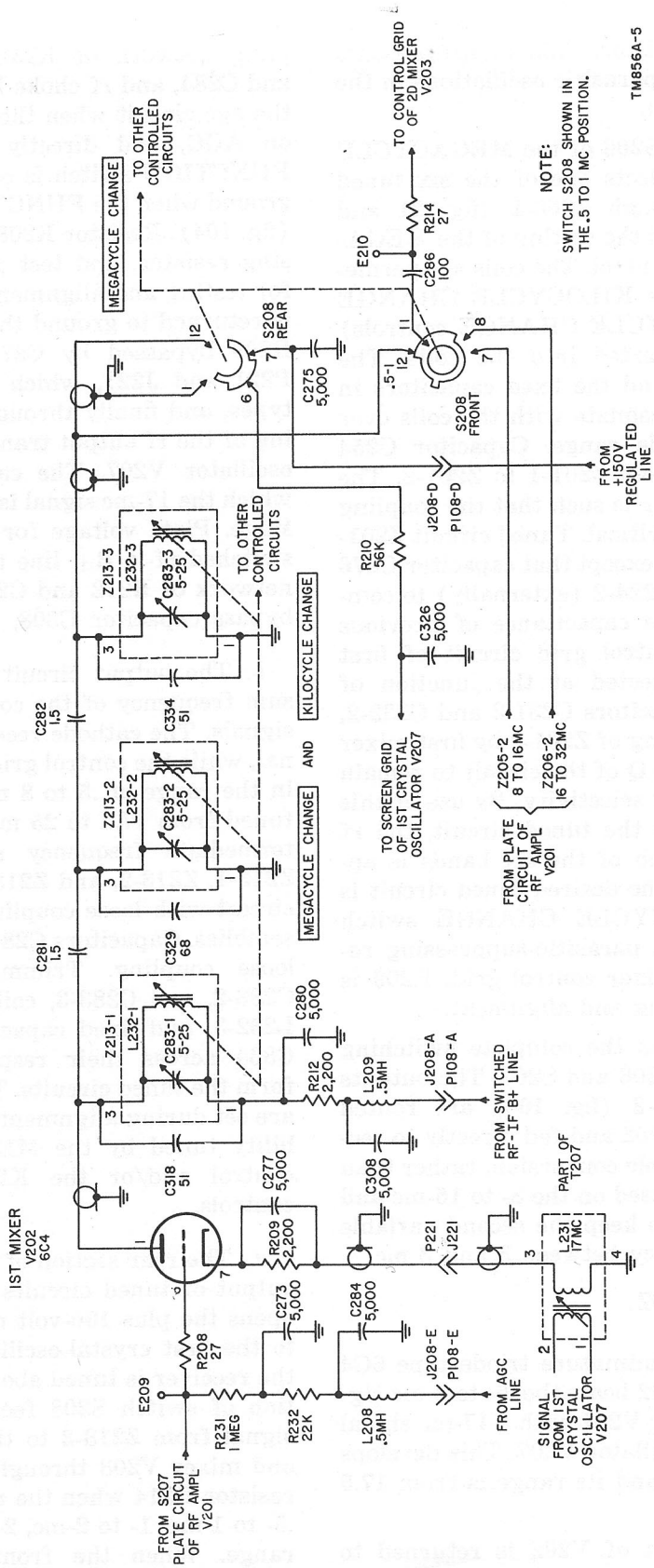

Figure 22. First mixer V202, schematic diagram.

tuned circuit Z205-2 is connected to the control grid of second mixer V203. When the 16- to 32-mc range is being used, terminal 2 of Z206-2 is connected to the control grid of V203.

57. First Crystal Oscillator V207

(fig. 23)

A miniature-type 5654/6AK5W tube is used to generate a stable 17-mc crystal-controlled signal for cathode injection into first mixer V202. This stage is operative on the .5- to 1-mc, 1- to 2-mc, 2- to 4-mc, and 4- to 8-mc ranges, as controlled by the MEGACYCLE CHANGE control on the front panel of the receiver.

a. Crystal Y201, 17-mc, is connected across the grid circuit of V207. It is contained in crystal oven HR202 and maintained at a temperature between 72° and 78° centigrade (162° to 172° fahrenheit). Resistor R207 is the grid resistor. Capacitors C324 and C325 form an approximately ten-to-one voltage divider for feed-back voltage for maintaining oscillation. Coil L201 isolates the 17-mc voltage from ground while maintaining the cathode of V207 near dc ground potential. This circuit is a modification of an electron-coupled Colpitts oscillator, as evidenced by the cathode choke, the voltage-dividing capacitors across the grid circuit, and the tap back to the cathode. The screen grid is held at rf ground potential by feedback capacitor C326.

b. Plate voltage is applied through connectors P108-K and J208-K, through the decoupling network of R211 and C328, and through the primary winding of T207. The primary of T207 is tuned to a frequency of 17 mc with coil L230 and fixed capacitor C327. The primary of T207 is adjusted to 17 mc with a movable powdered-iron slug in the coil. The screen grid of V207 is fed from the regulated +150-volt line through connectors P108-D and J208-D, through the switch contacts of the rear section of switch S208 and through the voltage-dropping decoupling network that consists of R210 and C326. Switch S208 (rear) removes the screen voltage from V207 when the receiver is tuned to the 8- to 16-mc or 16- to 32-mc band to disable the oscillator. Capacitor C275 bypasses any variations in the +150-volt regulated line.

c. Coil L231 is the secondary winding of T207. This coil consists of a few turns of wire coupled to primary coil L230. This low-impedance coil is the dc cathode return path for first mixer V202, and feeds the 17-mc signal to the cathode through the cathode-biasing and bypass network that consists of R209 and C277. Both connections to miniature coaxial connectors J221 and P221 are made through coaxial cables.

58. Second Mixer V203

(fig. 24)

The second mixer stage uses a miniature-type 6C4 triode. Second mixer V203 receives 17.5- to 25-mc signals on the control grid from first mixer V202 when the receiver is tuned from .5 to 8 mc, and 8 to 32 mc from the rf amplifier V201 when the receiver is tuned within that range. This switching is accomplished by the front section of S208 (fig. 22).

a. The grid circuit is returned to ground through parasitic-suppressing resistor R214, grid resistor R213, and the decoupling network consisting of R206 and C319. The ground connection continues through connectors J208-E and P108-E and to the agc circuit (fig. 104). Agc bias is fed to the control grid when the FUNCTION switch is on the AGC position, and the agc line is grounded when the FUNCTION switch is set to MGC. The cathode is returned to ground through the cathode-biasing and bypass network consisting of R215 and C287, the coaxial line, connectors P215 and J415, and finally through the secondary winding of T401. Transformer T401 is in the crystal oscillator subchassis. Plate voltage for second mixer V203 is obtained from the switched rf-if B+ line, through connectors P108-A and J208-A, rf choke coil L209, the plate decoupling network of R216, C308, C288, and coil L233-1 in Z216-1.

b. Triple-tuned circuits Z216-1, Z216-2, and Z216-3 tune to the difference frequency of the incoming control grid and cathode signals. These three tuned circuits are coupled by C289 and C290, and provide an essentially flat bandpass. Test point E211 is for testing and alignment, and R230 is a parasitic-suppressing resistor. The signals from the second crystal oscillator are of such frequency that the difference between the signal on second mixer grid V203 and the oscillator signal injected at its cathode lies between 2 and 3 mc. This difference frequency is the second variable if. Because the

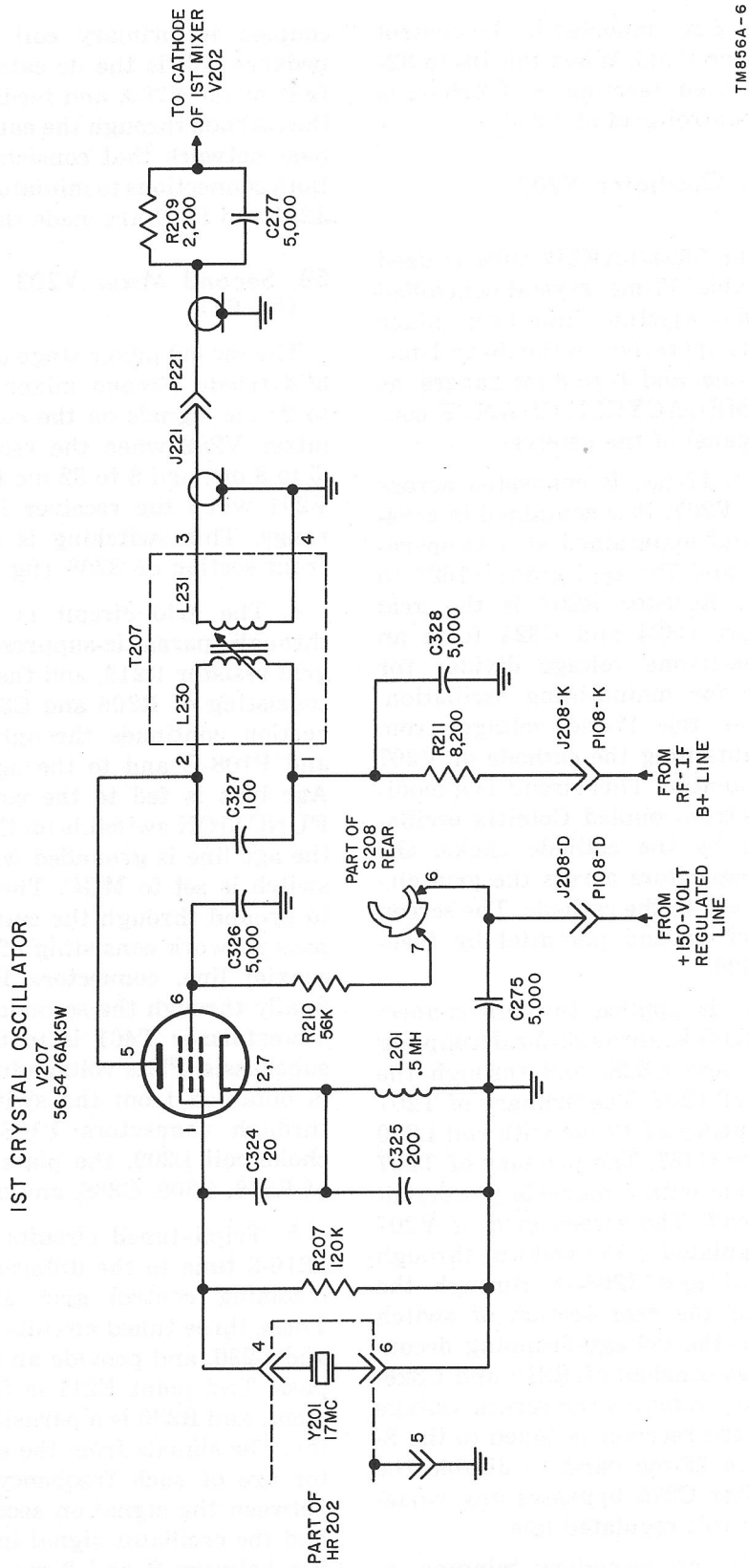

Figure 23. First crystal oscillator V207, schematic diagram.

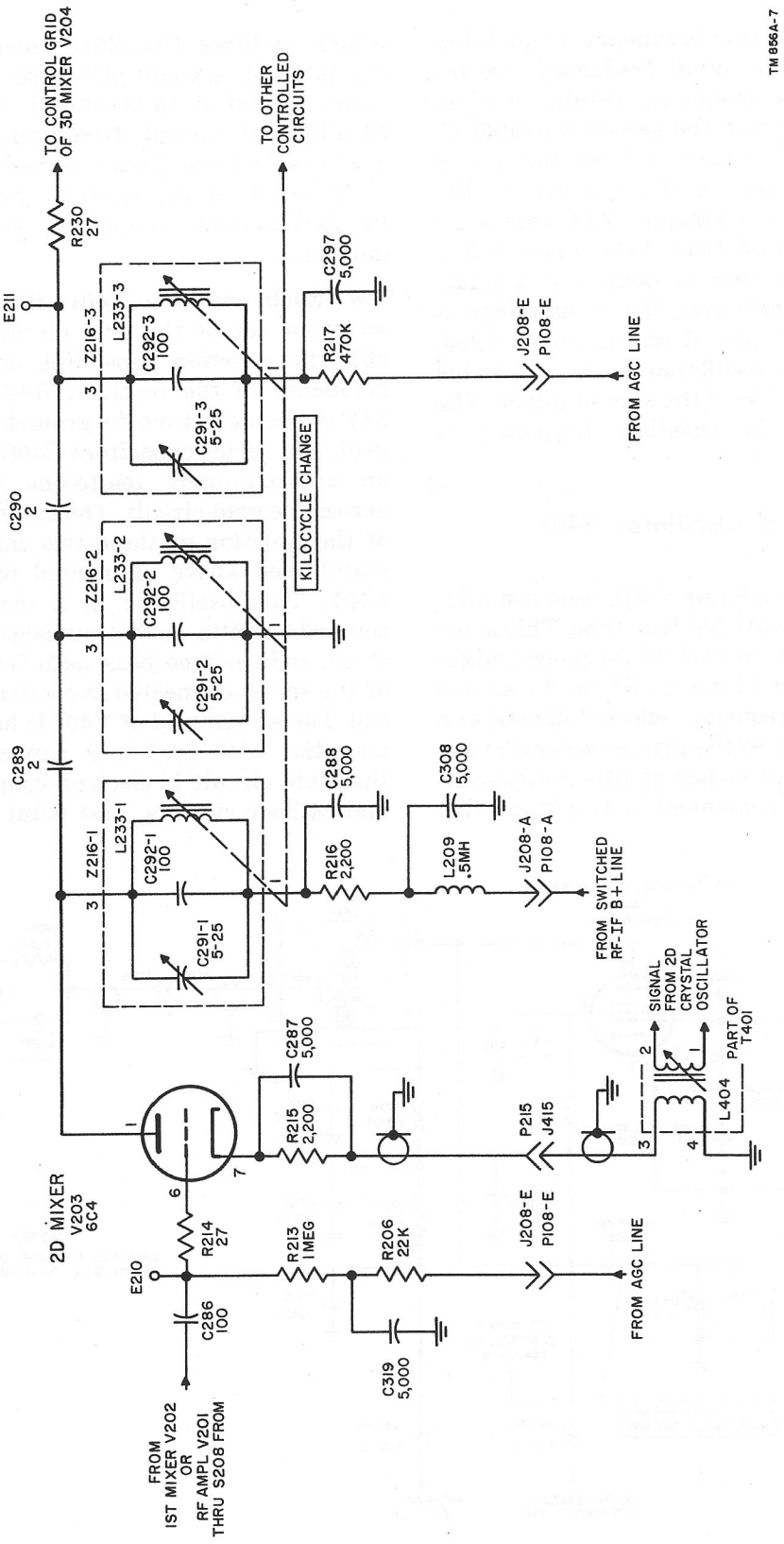

Figure 24. Second mixer V203, schematic diagram.

second crystal oscillator frequency from V401 always is above the signal frequency, an increase of the signal frequency results in a decrease of frequency for the second variable if. When the receiver is tuned to .5 mc, the second crystal oscillator feeds a 20-mc signal to the cathode circuit of second mixer V203. This beats with a 17.5-mc signal from first mixer V202. The resultant difference frequency is 2.5 mc. When an 8-mc signal from the rf amplifier is fed into the control grid of second mixer V203, the second crystal oscillator feeds an 11-mc signal into the cathode of the second mixer. The resultant variable intermediate frequency is 3 mc.

59. Second Crystal Oscillator V401 (fig. 25 and 26)

Second crystal oscillator V401 uses a miniature-type 5654/6AK5W pentode tube. This stage generates and feeds one of 32 frequency selections ranging from 11 mc to 34 mc to second mixer V203. The frequency selected depends on the input frequency to the grid of second mixer V203. The output frequency of this crystal-controlled oscillator is controlled by two 32-contact rotary switches (fig. 26), which select certain crystals and resonant plate circuits for the oscillator. A total of 15 crystals is used to produce 24 different output frequencies and 32 frequency selections. This is done by operating the plate circuit of the second crystal oscillator at its fundamental frequency, second, or third harmonic.

a. Each crystal, Y401 through Y415, is switched across the grid circuit of V401 (fig. 26), the selection depending on the operating frequency of the receiver. Resistor R404 (fig. 25) is the dc return to ground for the control grid, and series capacitors C408 and C409 form an approximately ten-to-one voltage divider across the grid circuit. The cathode is connected at the junction of these two capacitors, and is maintained above rf ground by rf choke coil L401. This oscillator is a modified electron-coupled Colpitts, as distinguished by the cathode choke and the feed-back path from the junction of the series-connected capacitors and the cathode. The screen grid of V401 is held at rf ground potential with feed-back capacitor C410, and the plate circuit is electron-coupled to the grid and cathode circuits. Test point E402 is located

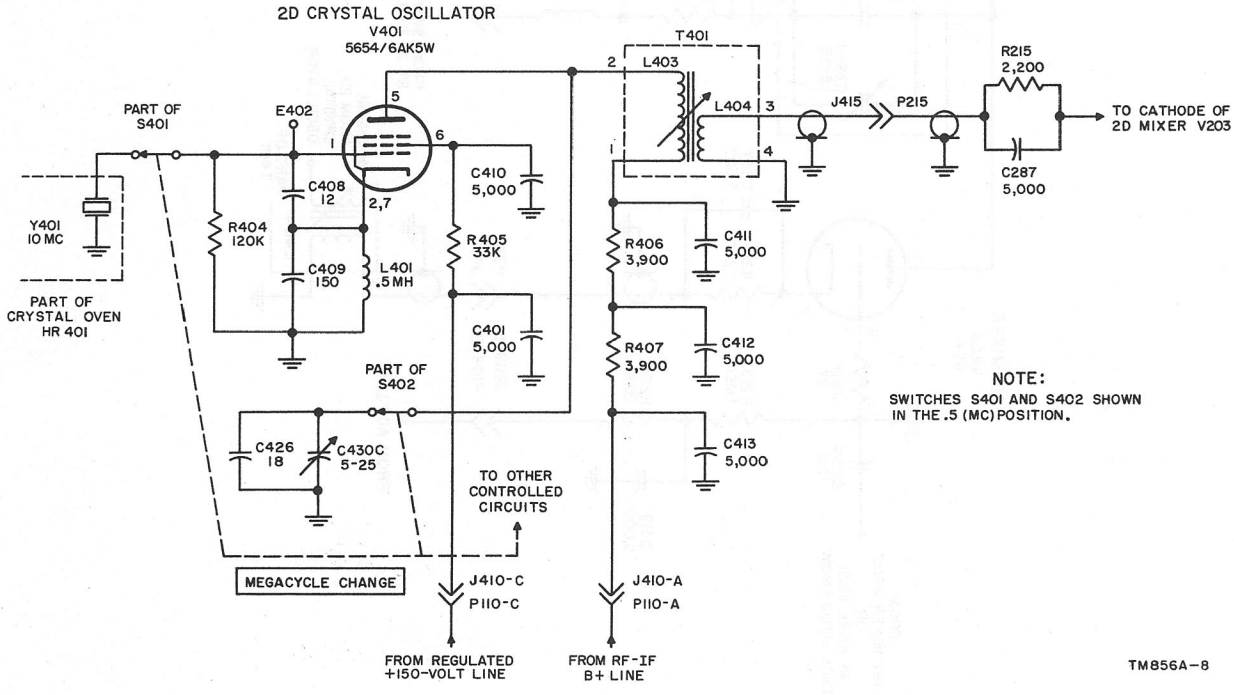

Figure 25. Second crystal oscillator V401, schematic diagram.

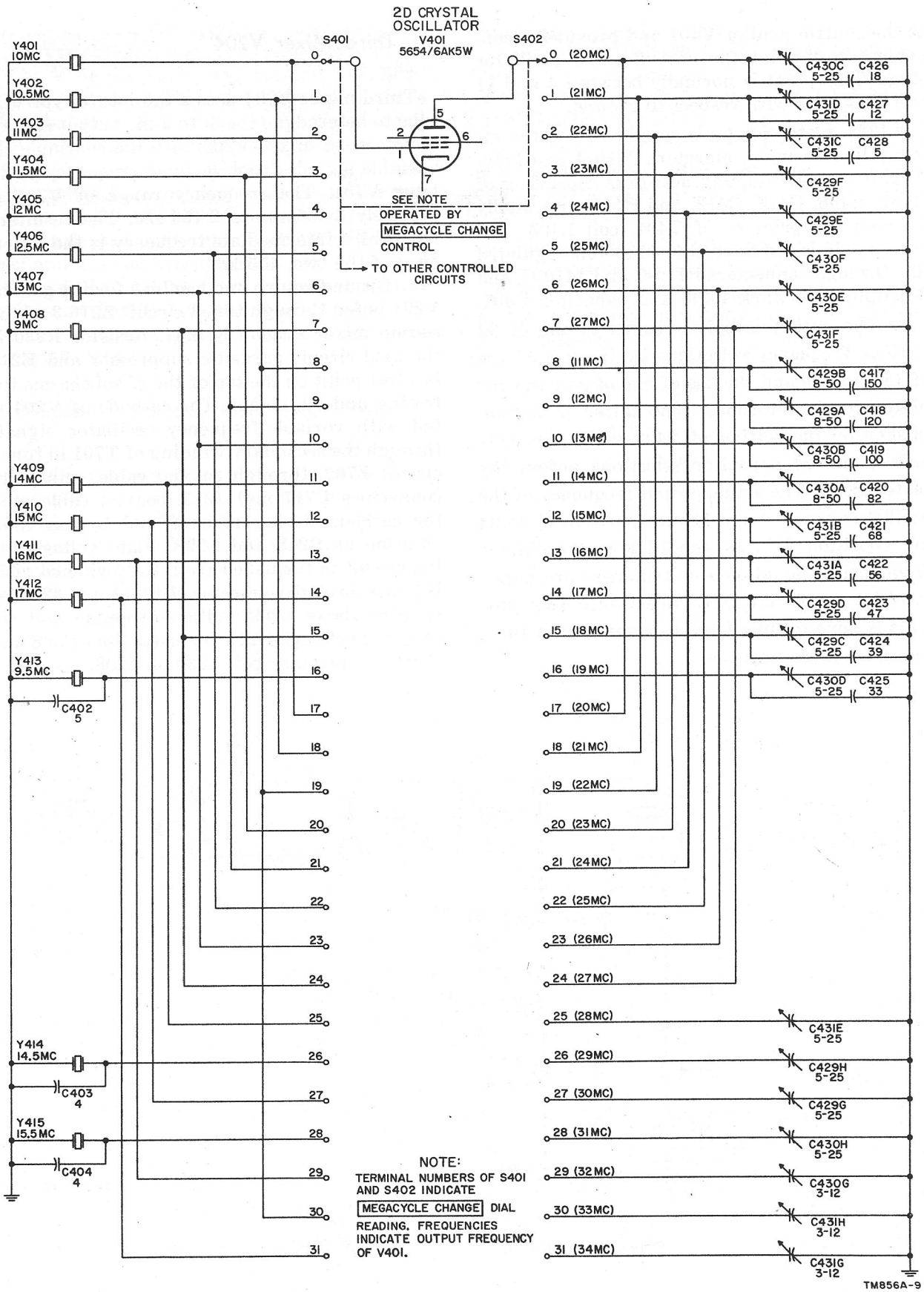

Figure 26. Second crystal oscillator V401, crystal and plate switching, schematic diagram.

at the control grid of V401 and provides a convenient test point for checking the oscillator stage. This point is normally between 4 and 11 volts negative with respect to ground.

b. The plate voltage is supplied from the rf-if B+ line through connectors P110-A and J410-A, two stage-decoupling networks consisting of R407, R406, C413, C412, and C411, and finally through the primary of T401, coil L403. The screen grid is fed from the +150-volt regulated line through connectors P110-C and J410-C, and decoupling network R405 and capacitor C401.

c. The output circuit is tuned to one of 32 various frequency selections by the use of one of 15 crystals and the use of one of 24 resonant plate circuit selections. The latter is accomplished by the setting of S402 which connects one of the 24 capacitor selections across the plate circuit. The actual output frequency of the oscillator ranges from 11 mc (position 8) to 34 mc (position 31). At the 12 lowest oscillator frequencies the adjustable trimmers are paralleled by additional fixed capacitance (fig. 26). This is done to tune L403 to resonance at these lower frequency ranges.

60. Third Mixer V204

(fig. 27)

Third mixer V204 uses a miniature-type 6C4 tube to heterodyne the 3- to 2-mc output signals from second mixer V203 with the continuously variable signals from variable frequency oscillator V701. The frequency range of V701 is precisely 3.455 mc to 2.455 mc. The resultant fixed third intermediate frequency is the difference of the two, 455 kc.

a. Ground return and agc bias for the grid of V204 is fed through tuned circuit Z216-3 of the second mixer stage (fig. 24). Resistor R230 is the grid circuit parasitic suppressor and E211 is a test point on the top of the rf subchassis for testing and alignment. The cathode of V204 is fed with variable-frequency oscillator signals through the secondary winding of T701 in tuned circuit Z702, through coaxial cable, miniature connectors P717 and J217, coaxial cable, and the cathode-biasing resistor and bypass combination of R218 and C298. Plate voltage for the circuit is furnished from the switched rf-if B+ line through connectors P108-A and J208-A, rf filter choke L209, voltage-dropping and decoupling network R219 and capacitors C308 and C307 and primary coil L234 of T208.

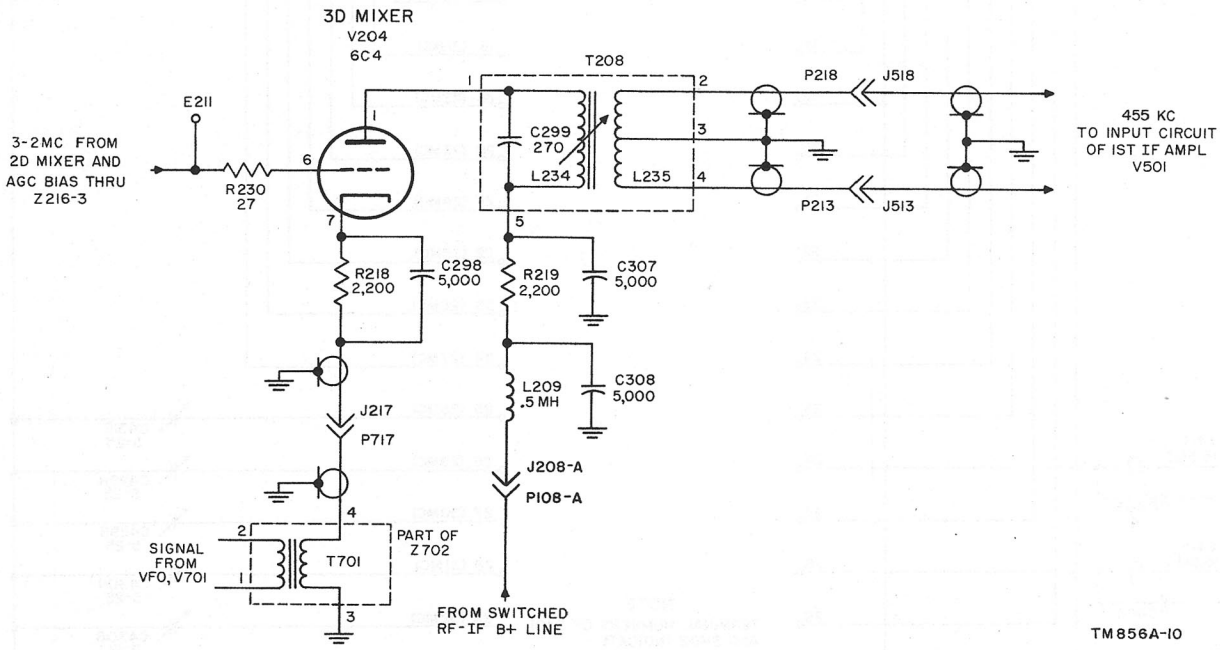

Figure 27. Third mixer V204, schematic diagram.

b. As the receiver frequency increases, the second variable intermediate frequency into the grid of V204 decreases, and the cathode signal likewise decreases. The rate of change of these two signal sources is such that the plate circuit at all times is tuned to a constant difference frequency of 455 kc. Coil L234 is tuned by adjusting the powdered-iron slug in the coil. The secondary coil of T208, L235, is center-tapped. The two signals are 180° out of phase with each other and are fed through P218 and J518, and P213 and J513 to the input circuit of first if amplifier stage V501 in the if subchassis. The first if amplifier stage is discussed in paragraphs 62 and 63.

61. Variable-frequency Oscillator V701

(fig. 28)

Variable-frequency oscillator V701 uses a miniature-type 5749/6BA6W tube, which generates the signals fed to the cathode circuit of the third mixer. The frequency range of V701 is precisely 3.455 mc to 2.455 mc. The frequency-determining elements of this circuit are contained in oven HR701, which operates when the OVENS switch on the rear panel is in the ON position (fig. 102).

a. The variable-frequency oscillator is an electron-coupled Hartley oscillator. The screen grid acts as the plate of an equivalent triode oscillator circuit. A powdered-iron slug in coil L702 is moved in the coil by the operation of the KILOCYCLE CHANGE control. Coils L701 and L702 with capacitors C701, C702, and C703 form the frequency-determining circuit. Capacitor C704 and resistor R701 develop grid leak bias on the control grid of this tube.

b. The screen grid voltage for V701 is obtained from the +150-volt regulated line and is connected through connectors J709-B and P109-B and the voltage-dropping and decoupling network consisting of R702 and C714. Capacitor C705 is the feed-back capacitor to the grid tank circuit. The plate voltage for V701 is supplied from the rf-if B+ line through connectors P109-A and J709-A, through the plate decoupling network consisting of R703, C707, and C708, and the primary winding of T701.

c. The plate circuit of V701 consists of tuned circuit Z702 which includes the primary of T701 and variable capacitor C706. The secondary coil of T701 and capacitor C709 are shunted by R704, a 150-ohm resistor. This resistor broadens the response over the range of 3.455 kc to 2.455 kc so that the output voltage injected into the cathode of the third mixer is essentially constant in amplitude with frequency. The impedance match from the plate circuit of V701 to the cathode circuit of V204 is optimum.

d. The sealed tuning unit is a precision device comparable in accuracy and stability to laboratory frequency standards. It is sealed and not intended to be repaired in the field. Coil L701 is tunable, and is the *end point* adjustment. This adjustment is made at the factory to provide the complete frequency range of precisely 3.455 to 2.455 mc with exactly 10 turns of the vfo tuning shaft. The adjustment of L701 can be used to restore the 3.455- to 2.455-mc 10-turn shaft travel if circuit aging causes the 1-mc frequency coverage to change appreciably.

62. Crystal Filter

(fig. 29)

A quartz crystal, employed as an if selectivity filter, contains the properties of a high-Q resonant circuit consisting of capacitance, inductance, and resistance. To obtain .1- and 1-kc bandwidth, a crystal filter, consisting of tuned circuit Z501 with 455-kc crystal Y501, is used preceding the first if amplifier, V501.

a. The 455-kc output signal from third mixer V204 is coupled to the if subchassis through transformer T208. The secondary winding of this transformer has its center tap grounded, thus placing the ends of the coil 180° out of phase with each other. This coil is coupled through coaxial cables and connectors P218, and J518, and P213 and J513 into crystal filter Z501. Because of its high Q, crystal Y501 passes only those signals at or very close to 455 kc. Because of crystal holder capacitance and stray circuit capacitance, the circuit would be unbalanced if neutralizing capacitor C520 were not also connected to the control grid of V501. This capacitance introduces a signal 180° out of phase at terminal 1 of Z501, and with proper adjustment, neutralizes the crystal holder and stray circuit capacitance. When this capacitor is properly adjusted, extremely narrow and symmetrical band pass with steep skirts is pro-

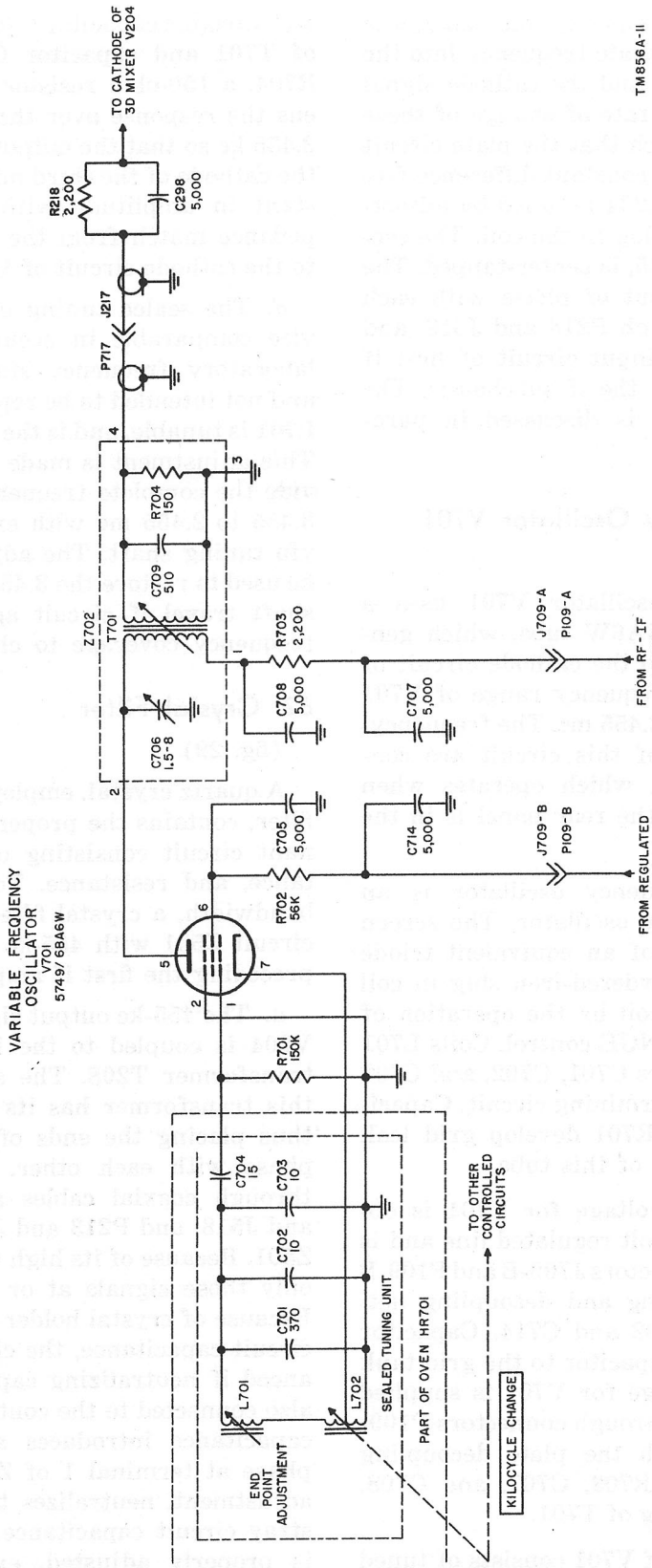

Figure 28. Variable-frequency oscillator V701, schematic diagram.

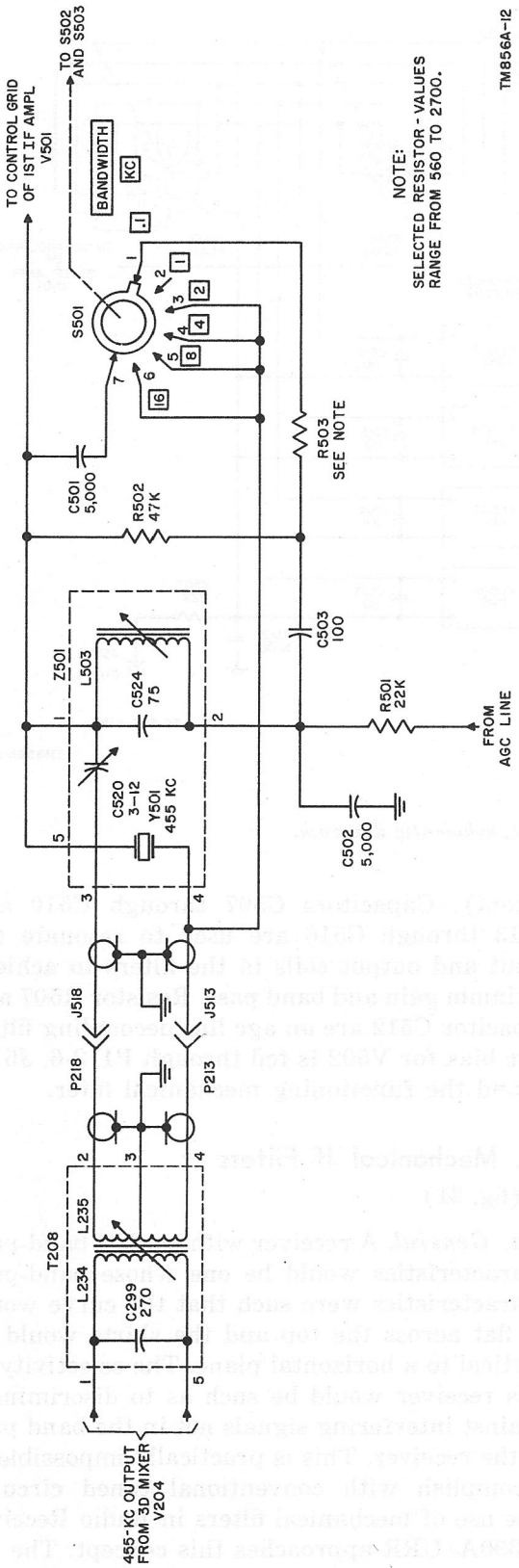

Figure 29. Crystal filter, schematic diagram.

vided by Y501. Coil L503, capacitor C524, and stray capacitances are tuned to 455 kc.

b. When BANDWIDTH control S501 is in the .1 KC or 1 KC position, Y501 functions in the circuit. When the BANDWIDTH control is in the .1 KC position, the crystal circuit is loaded by C503 in series with the combination of R502 in parallel with the series combination of C501 and R503. The exact value of R503 is chosen between 560 and 2,700 ohms, and the value is selected for a bandwidth of .1 kc, an equivalent circuit Q of at least 4,500. When the BANDWIDTH control is placed in the 1 KC position, C501 and R503 are removed from the circuit, and the load becomes essentially resistive with R502. This causes the circuit Q to decrease to approximately 450, and bandpass is increased to 1 kc. When this control is turned to the 2 KC, 4 KC, 8 KC, or 16 KC position, the control grid of V501 is coupled through capacitor C501 directly to terminal 4 of Z501 ahead of crystal Y501, effectively removing the crystal from the circuit.

63. First If Amplifier V501 and Mechanical Filters

(fig. 30)

First if amplifier V501 uses a miniature-type 5749/6BA6W pentode tube. This stage amplifies the 455-kc if signals from crystal filter Z501.

a. The control grid of V501 is returned to the agc line through the crystal filter circuit (fig. 29). The cathode circuit returns to ground through cathode-biasing resistor R504, if choke coil L501, connectors J512-16 and P112-16, and RF GAIN control R103. Capacitors C505 and C504 prevent degeneration and add additional bypassing for if signals to ground. Screen grid voltage is obtained from the junction of resistors R506 and R505, part of a voltage divider across the switched rf-if B+ line consisting of resistors R506, R505, R504, and RF GAIN control R503. Capacitor C506 bypasses the screen grid to prevent degeneration. Plate voltage for V501 is obtained through rf choke coil L505 and the decoupling filter consisting of R508 and C511. Plate voltage for the plate and screen grid circuits is obtained through J512-2 and P112-2 from the switched rf-if B+ line.

b. Four mechanical filters are coupled to the shunt-fed plate circuit of V501 through coupling

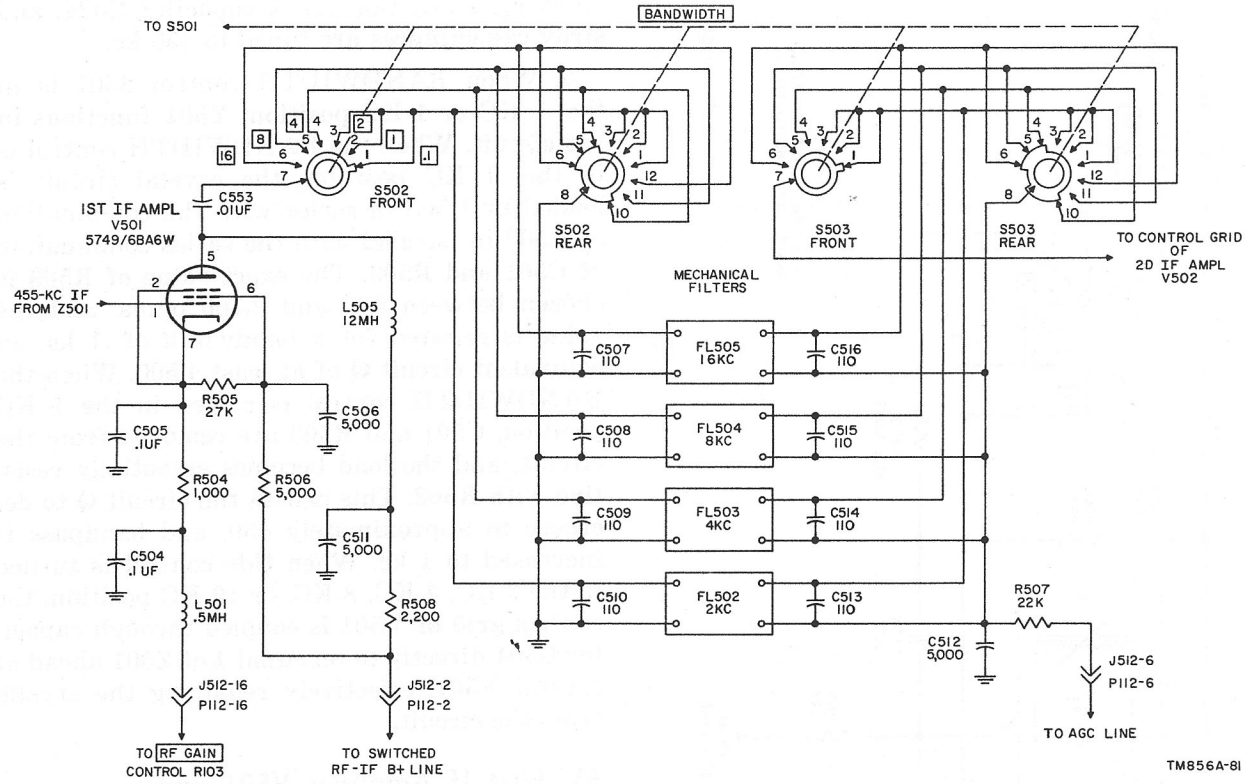

Figure 30. First if amplifier V501, schematic diagram.

capacitor C553 and BANDWIDTH switches S502 and S503. When this BANDWIDTH switch is in the .1 KC, 1 KC, or 2 KC position, 2-kc mechanical filter FL502 is switched into the circuit. The 4 KC, 8 KC, and 16 KC positions of the BANDWIDTH control use FL503 through FL505, respectively. The band pass of the if amplifiers, and ultimately the entire receiver, is determined by the selection of one of the six switch positions of the BANDWIDTH control. The very narrow bandwidth .1 KC and 1 KC positions of this switch also incorporate the crystal filter (par. 62) into the first if amplifier circuit. Switch S502 (front) connects the plate circuit of V501 to the input of the appropriate mechanical filter, and S503 (front) connects the output of the filter to the control grid circuit of second if amplifier V502. Switches S502 (rear) and S503 (rear) short-circuit the input and output terminals of the unused mechanical filters. This is done to prevent stray coupling to the if circuits of the unused mechanical filters through the terminal-to-terminal capacitance of switches S502 (front) and S503 (front). Capacitors C507 through C510 and C513 through C516 are used to resonate the input and output coils in the filters to achieve optimum gain and band pass. Resistor R507 and capacitor C512 are an agc line decoupling filter. Agc bias for V502 is fed through P112-6, J512-6, and the functioning mechanical filter.

64. Mechanical If Filters

(fig. 31)

a. General. A receiver with perfect band-pass characteristics would be one whose band-pass characteristics were such that the curve would be flat across the top and the skirts would be vertical to a horizontal plane. The selectivity of this receiver would be such as to discriminate against interfering signals not in the band pass of the receiver. This is practically impossible to accomplish with conventional tuned circuits. The use of mechanical filters in Radio Receiver R-390A/URR approaches this concept. The explanation of the mechanical filters used in the receiver is divided into two parts. This para-

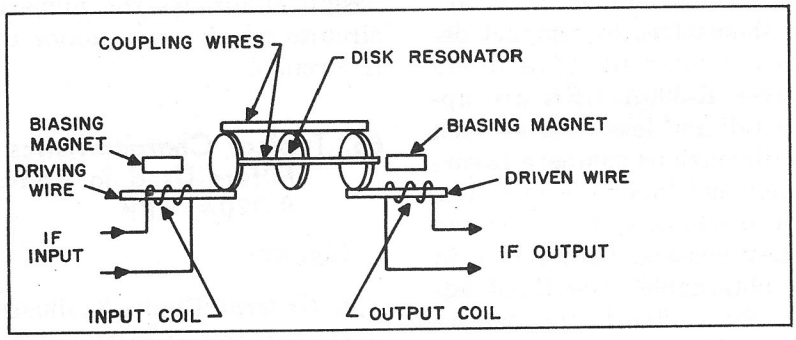

A. COMPONENTS OF A MECHANICAL FILTER

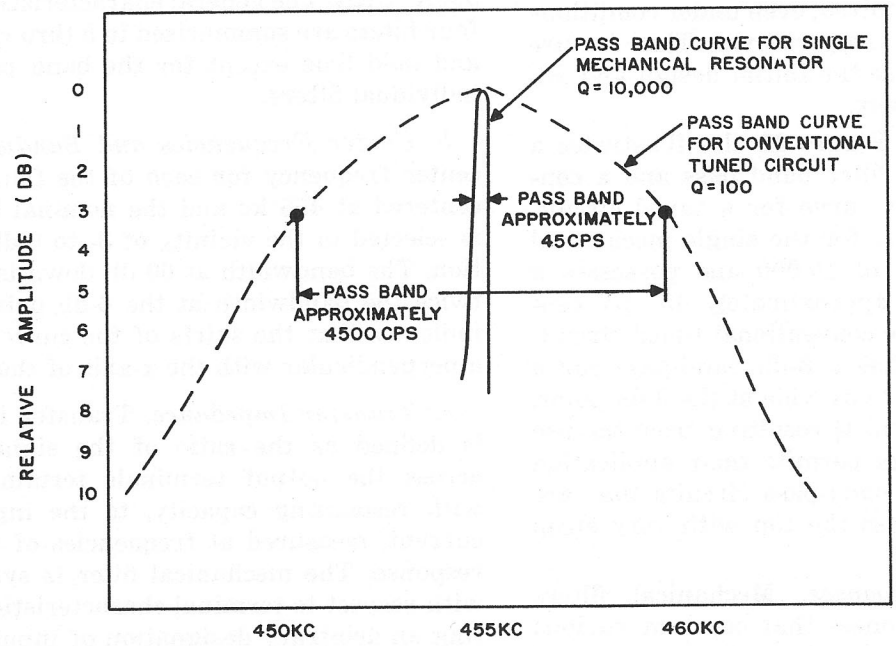

B. TYPICAL PASS BAND CURVES OF CONVENTIONAL TUNED CIRCUIT AND A SINGLE MECHANICAL RESONATOR

TM856A-53

Figure 31. Typical mechanical filters.

graph gives a general description of mechanical filters, and paragraph 65 deals specifically with those used in the receiver.

b. Typical Construction. Figure 31 illustrates typical construction of a mechanical filter. A signal current is passed through the input transducer coil, which causes the driving wire to expand and contract due to magnetostriction. This mechanical motion is transmitted to the disk resonators through the coupling wires. Each disk resonator is sharply resonant to the intermediate frequency, and several such disks, synchronously tuned, are used to accomplish the required band pass. The last disk resonator is tied to the driven wire, which induces the output if signal into the output transducer coil.

c. Characteristics. Mechanical filters have three distinctive advantages over conventional tuned band pass filters. The first of these lies in the fact that in the low if range, 100 to 500

kc, the dimensions of the mechanical filters are very small and lend themselves to compact design of communication equipment. (The filters used in Radio Receiver R-390A/URR are approximately 3 inches tall and less than an inch in diameter.) These dimensions compare favorably with the most compact tuned circuits. The second advantage of mechanical filters is the extremely high Q they possess. Circuit Q's in excess of 2,000 are obtainable. The third advantage mechanical filters offer is the permanence of tuning of the filter. Once tuned and adjusted to the desired band pass, no further adjustments are required, even under conditions of widely varying temperatures. This feature is important because the initial design and adjustment are complex.

d. Performance. Figure 31 also illustrates a typical mechanical filter band pass and a conventional band-pass curve for a tuned circuit. The band-pass curve for the single mechanical resonator has a Q of 10,000 and possesses a 3-db band pass of approximately 45 cps, centered at 455 kc. The conventional tuned circuit, with a Q of 100, has a 3-db band-pass curve approximately 4,500-cps wide at the 3-db point. The attainable circuit Q resulting from the use of mechanical filters permits their application to highly selective band-pass circuits that are essentially flat across the top with very steep skirts.

e. Spurious Responses. Mechanical filters have spurious responses that occur at various points removed from the desired band pass, and necessitate correct design in order to keep these spurious responses as far removed from the center frequency as possible. These spurious responses must be attenuated sufficiently to prevent false band-pass characteristics. This disadvantage can be minimized by designing an if circuit that has sufficient attenuation at these off-resonant frequencies. One way of accomplishing this is with the use of additional conventional tuned if circuits.

f. Applications. The use of mechanical filters in if circuits makes it possible to eliminate some of the conventional tuned if circuits that are normally found in such applications. An if circuit thus can be designed with a minimum number of tuned circuits; the necessary amplification can be obtained with simple untuned and/or broad-band if amplifiers. This type of design eliminates the numerous critical tuned circuits which are a major cause of trouble in if circuits.

65. Typical Characteristics of Mechanical Filters Used in Radio Receiver R-390A/URR

(fig. 32)

a. General. Figure 32 illustrates typical band-pass characteristics of the 2-, 4-, 8-, and 16-kc mechanical filters used in Radio Receiver R-390A/URR. The general characteristics of these four filters are summarized in *b* through *g* below and hold true except for the band pass of the individual filters.

b. Center Frequencies and Bandwidth. The center frequency for each of the four filters is centered at 455 kc and the nominal band pass is selected in the vicinity of 3- to 6-db attenuation. The bandwidth at 60 db down is less than twice the bandwidth at the 6-db points, which indicates that the skirts of the curve approach a perpendicular with the x-axis of the curve.

c. Transfer Impedance. Transfer impedance is defined as the ratio of the signal voltage across the output terminals terminated only with resonating capacity, to the input signal current, measured at frequencies of maximum response. The mechanical filter is symmetrical with respect to terminal characteristics permitting an arbitrary designation of input and output terminals. This transfer impedance is approximately 7,000 ohms.

d. Voltage and Current Considerations. Either series or shunt feed can be used with these mechanical filters; however, shunt feed operation is used to prevent the flow of dc through the transducer coil. With series feed, satisfactory performance is obtainable with dc from 0 to 5 milliamperes, but dc in excess of 20 milliamperes will damage the coils. The maximum dc voltage impressed across the coils must be below 300 volts, or voltage breakdown might occur.

e. Resonating Capacitance. To obtain proper operation, external capacitance is required across the terminals of the filters to resonate the transducer coils. The total external capacitance required is 120 to 140 uuf. This figure

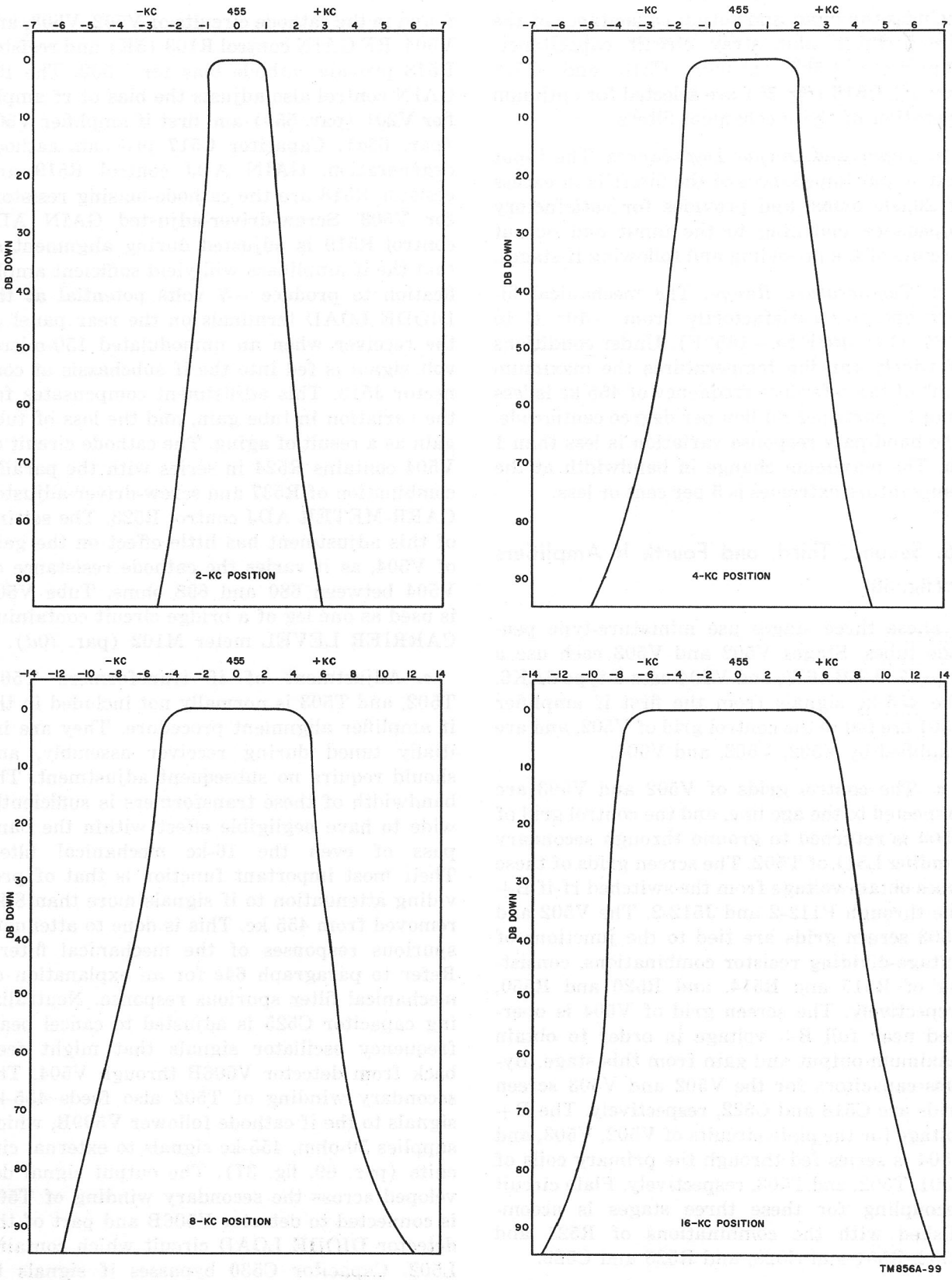

Figure 32. Band pass of mechanical filters.

includes the input and output capacitance of the circuit tubes plus stray circuit capacitance. Capacitors C507 through C510 and C513 through C516 (fig. 30) are selected for optimum operation of the mechanical filters.

f. Input and Output Impedances. The input and output impedances of the filters is in excess of 20,000 ohms, and provides for satisfactory impedance matching to the input and output circuits of the preceding and following if stages.

g. Temperature Range. The mechanical filters operates satisfactorily from —40° C to +85° C (—40°F to +185°F). Under conditions of widely varying temperatures the maximum shift of the reference frequency of 455 kc is less than 10 parts per million per degree centigrade. The band-pass response variation is less than 1 db. The maximum change in bandwidth at the temperature extremes is 5 per cent or less.

66. Second, Third, and Fourth If Amplifiers

(fig. 33)

These three stages use miniature-type pentode tubes. Stages V502 and V503 each use a type 5749/6BA6W, and V504 uses a type 6AK6. The 455-kc signals from the first if amplifier V501 are fed to the control grid of V502, and are amplified by V502, V503, and V504.

a. The control grids of V502 and V503 are connected to the agc line, and the control grid of V504 is returned to ground through secondary winding L511 of T502. The screen grids of these tubes obtain voltage from the switched rf-if B+ line through P112-2 and J512-2. The V502 and V503 screen grids are tied to the junctions of voltage-dividing resistor combinations, consisting of R515 and R514, and R520 and R550, respectively. The screen grid of V504 is operated near full B+ voltage in order to obtain maximum output and gain from this stage. Bypass capacitors for the V502 and V503 screen grids are C518 and C522, respectively. The B+ voltage for the plate circuits of V502, V503, and V504 is series fed through the primary coils of T501, T502, and T503, respectively. Plate circuit decoupling for these three stages is accomplished with the combinations of R521 and C552, R551 and C523, and R525 and C529.

b. Figure 33 shows that variable resistors are found in the cathode circuits of V502, V503, and V504. RF GAIN control R103 (5K) and resistor R513 provide cathode bias for V502. The RF GAIN control also adjusts the bias of rf amplifier V201 (par. 55*b*) and first if amplifier V501 (par. 63*a*). Capacitor C517 prevents cathode degeneration. GAIN ADJ control R519 and resistor R518 are the cathode-biasing resistors for V503. Screw-driver-adjusted GAIN ADJ control R519 is adjusted during alignment so that the if amplifiers will yield sufficient amplification to produce —7 volts potential at the DIODE LOAD terminals on the rear panel of the receiver when an unmodulated 150-microvolt signal is fed into the if subchassis at connector J513. This adjustment compensates for the variation in tube gain, and the loss of tube gain as a result of aging. The cathode circuit of V504 contains R524 in series with the parallel combination of R537 and screw-driver-adjusted CARR-METER ADJ control R523. The setting of this adjustment has little effect on the gain of V504, as it varies the cathode resistance of V504 between 680 and 698 ohms. Tube V504 is used as one leg of a bridge circuit containing CARRIER LEVEL meter M102 (par. 70*d*).

c. Adjustment of if transformers T501, T502, and T503 is normally not included in the if amplifier alignment procedure. They are initially tuned during receiver assembly, and should require no subsequent adjustment. The bandwidth of these transformers is sufficiently wide to have negligible effect within the band pass of even the 16-kc mechanical filter. Their most important function is that of providing attenuation to if signals more than 8 kc removed from 455 kc. This is done to attenuate spurious responses of the mechanical filters. Refer to paragraph 64*e* for an explanation of mechanical filter spurious response. Neutralizing capacitor C525 is adjusted to cancel beat-frequency oscillator signals that might feed back from detector V506B through V504. The secondary winding of T502 also feeds 455-kc signals to the if cathode follower V509B, which supplies 50-ohm, 455-kc signals to external circuits (par. 69, fig. 37). The output signal developed across the secondary winding of T503 is connected to detector V506B and part of the detector DIODE LOAD circuit which contains L502. Capacitor C530 bypasses if signals to ground.

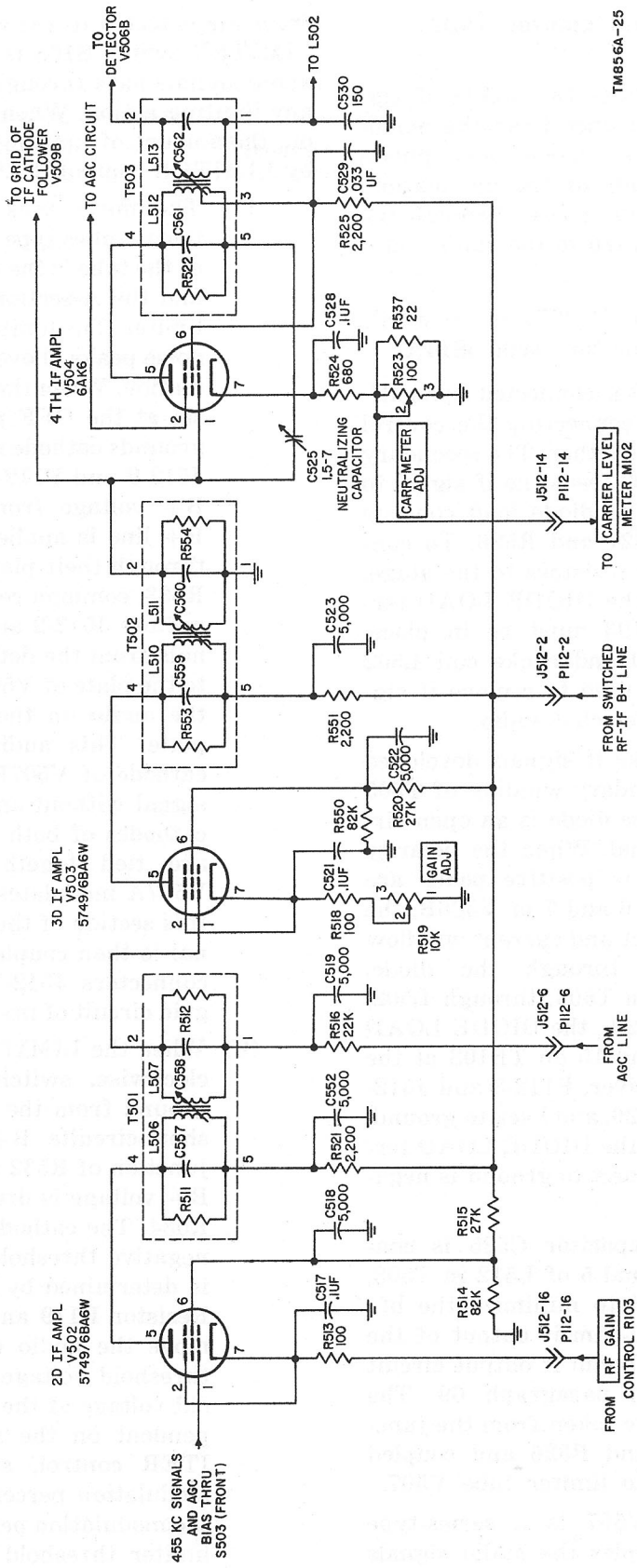

Figure 33. Second, third, and fourth if amplifiers V502 through V504, schematic diagram.

67. Detector V506B and Limiter V507

(fig. 34 and 35)

The detector demodulates the 455-kc if signal to recover the intelligence from the modulated signals. The limiter removes noise pulses that exceed the amplitude of the modulation. The output of the detector passes through the limiter stage before it is fed to the audio channels.

a. Detector. This stage, V506B, uses one half of a miniature twin triode tube type 5814A.

(1) Detector V506B is connected as a half-wave diode by connecting the control grid and plate together. The secondary winding of T503 feeds the if signal to the detector. The diode load consists of resistors R527 and R526. To connect these load resistors to the stage, the jumper at the DIODE LOAD terminals on TB103 must be in place. Capacitor C530 and choke coil L502 are an if filter used to remove if signals from the detected audio.

(2) When the 455-kc if signals developed across the secondary winding of T503 are negative, the diode is an open circuit to the signal. When the polarity reverses and the positive peaks are applied to pins 6 and 7 of V506B, the tube will conduct and current will flow from ground, through the diode, through L513 in T503, through L502, J512-5 and P112-5, the DIODE LOAD terminals 14 and 15 on TB103 at the rear of the receiver, P112-3 and J512-3, R527, and R526, and back to ground. The polarity at the DIODE LOAD terminals with respect to ground is negative.

(3) Neutralizing capacitor C525 is connected to terminal 5 of L512 in T503, and is adjusted to minimize the bfo signal to the 50-ohm if output of the receiver. The 50-ohm if output circuit is explained in paragraph 69. The audio signals are taken from the junction of R527 and R526 and coupled through C531 to limiter tube V507.

b. Limiter. Limiter V507 is a series-type diode limiter, which couples the audio signals from the detector to the audio channels. When LIMITER switch S108 is in the OFF position, audio signals pass through stage V507 without any limiting action. When this switch is turned on, the amount of limiting applied is controlled by LIMITER control R120.

(1) The limiter uses both sections of twin triode tubes type 5814A. The B-section of the tube is the negative peak limiter, and the A-section is the positive peak limiter. The limiter effectively removes noise peaks above the level of the modulation. When the LIMITER control is set at the OFF position, switch S108 grounds cathode resistor R535 through J512-9 and P112-9. At the same time, B+ voltage from the switched rf-if B+ line is applied to the diode plates through their plate resistors R532 and R533, common resistor R534, and connectors J512-2 and P112-2. Audio signals from the detector diode load pass to the plate of V507B and superimpose the audio on the B+ voltage at the plate. This audio signal causes the cathode of V507B to follow the audio signal without any limiting. Since the cathodes of both sections of the tubes are tied together, the cathode of V507A modulates the plate current of this section of the tube. The audio signal is then coupled through C549 and connectors J512-7 and P112-7 to the grid circuit of first af amplifier V601A.

(2) When the LIMITER control is turned clockwise, switch S108 removes the ground from the bottom of R535 and short-circuits B+ to ground at the junction of R532 and R533. The entire B+ voltage is dropped across resistor R534. The cathodes of V507 assume a negative threshold, the level of which is determined by the setting of R120. Resistor R119 and capacitor C101 remove the audio component from the threshold voltage, leaving the threshold voltage at the average dc level, dependent on the setting of the LIMITER control, signal strength, and modulation percentage. Depending on the modulation percentage, the total dc limiter threshold voltage available is

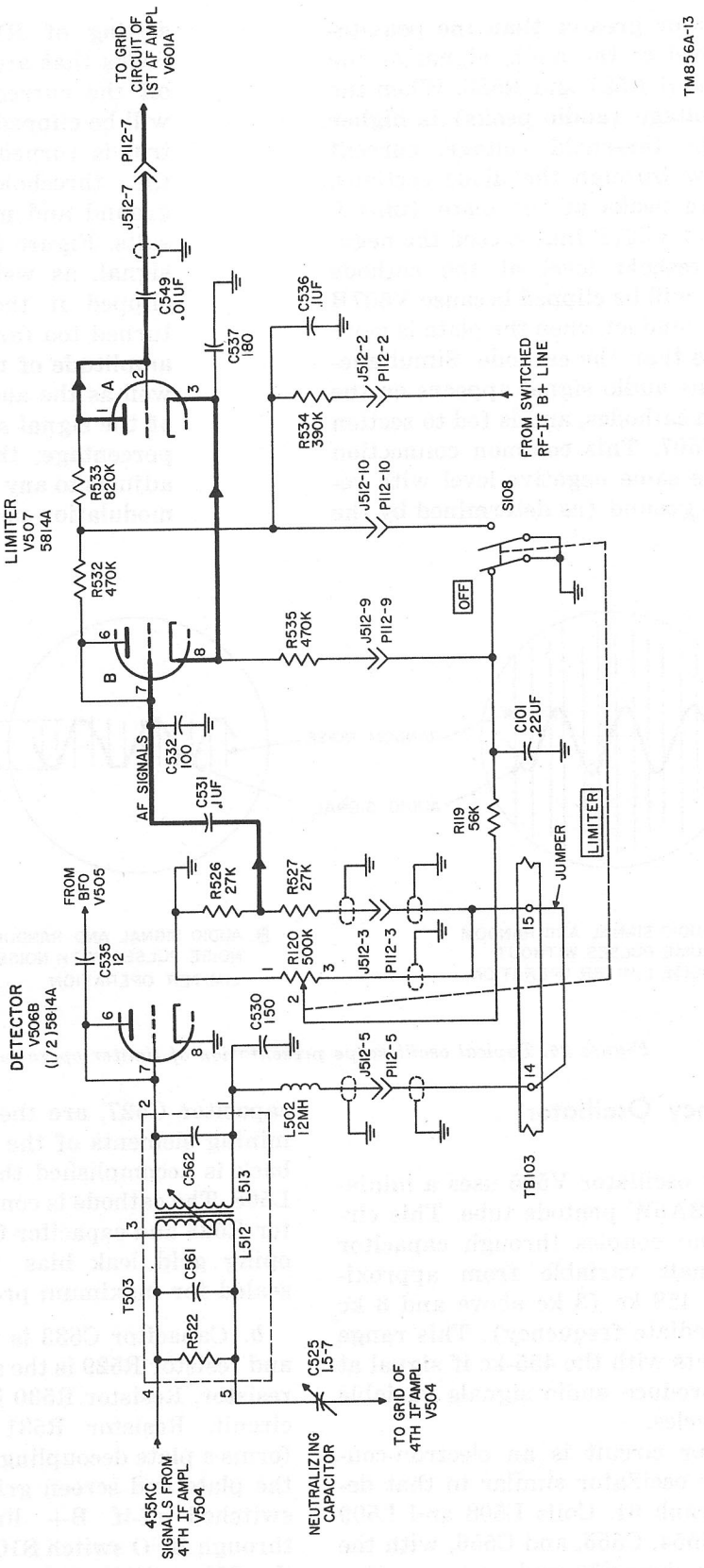

Figure 34. Detector V506B and limiter V507, schematic diagram.

equal to or greater than the peak-to-peak level of the audio signal at the junction of R527 and R526. When the plate voltage (audio peaks) is higher than the threshold voltage, current will flow through the diode sections. Negative peaks at the plate (pins 6 and 7) of V507B that exceed the negative threshold level at the cathode (pin 8) will be clipped because V507B will not conduct when the plate is more negative than the cathode. Simultaneously, the audio signal appears on the common cathodes, and is fed to section A of V507. This common connection is at the same negative level with respect to ground (as determined by the setting of R120), and any positive peaks that are positive enough to cut off the current flow through V507A will be clipped. As the LIMITER control is turned clockwise towards 10, the threshold voltage approaches ground and more severe clipping results. Figure 35 shows that the audio signal, as well as the noise, will be clipped if the LIMITER control is turned too far clockwise. Because the amplitude of the threshold voltage, as well as the audio signal, is a function of the signal strength and modulation percentage, the circuit automatically adjusts to any level of signal input and modulation percentage.

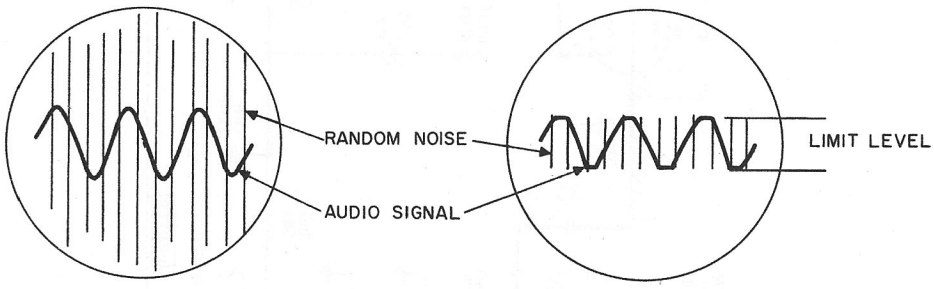

Figure 35. Typical oscilloscope presentation of limiter operation.

68. Beat-frequency Oscillator

(fig. 36)

Beat-frequency oscillator V505 uses a miniature-type 5749/6BA6W pentode tube. This circuit generates and couples through capacitor C535 stable signals variable from approximately 452 kc to 458 kc (3 kc above and 3 kc below the intermediate frequency). This range of frequencies beats with the 455-kc if signal at the detector to produce audio signals variable from 0 to 3,000 cycles.

a. The oscillator circuit is an electron-coupled Hartley-type oscillator similar to that described in paragraph 61. Coils L508 and L509 with capacitors C554, C555, and C556, with the addition of input capacity and compensation capacitor C527, are the basic frequency-determining elements of the circuit. Inductive feedback is accomplished through tapped tank coil L508. The cathode is connected to the tap. Resistor R528 and capacitor C526 are used for developing grid leak bias. Tuned circuit Z502 is sealed for maximum protection and reliability.

b. Capacitor C533 is the feed-back capacitor and resistor R529 is the screen voltage-dropping resistor. Resistor R530 is the plate load for the circuit. Resistor R531 with capacitor C534 forms a plate decoupling circuit. The voltage for the plate and screen grid is obtained from the switched rf-if B+ line, and is completed through BFO switch S101 when the switch is in the ON position.

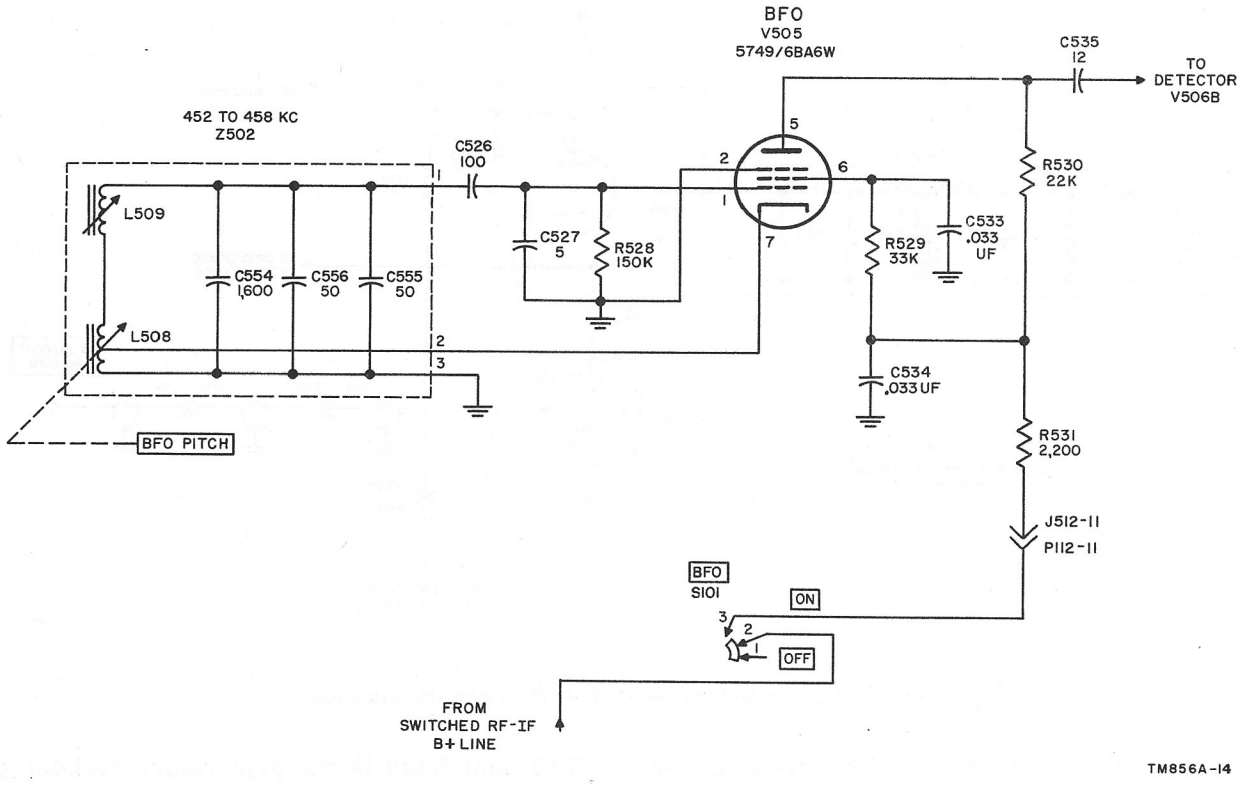

Figure 36. Beat-frequency oscillator V505, schematic diagram.

69. If Cathode Follower V509B

(fig. 37)

This stage uses one half of a miniature twin triode tube type 5814A. This stage provides a 50-ohm 455-kc if output signal for use with a frequency-shift converter in a teletypewriter system. This stage, being a cathode follower, reflects a very high impedance at its input circuit, having negligible loading effect on if transformer T502, which also feeds the grid of fourth if amplifier V504.

a. The input circuit of this cathode follower is connected across the secondary winding of T502. The plate circuit of this tube is decoupled and bypassed to ground with resistor R539 and capacitor C541, and its plate voltage is obtained from the switched rf-if B+ line through connectors P112-2 and J512-2.

b. Two signal output connections are made at the low-impedance cathode of this stage. The first output is developed across the tuned circuit resonant to 455 kc which consists of coil L504 and series-connected capacitors C539 and C540. The IF OUTPUT connector at the rear panel of the receiver is connected to the junction of C539 and C540 through resistor R552, providing an if output impedance to match a 50-ohm load. Resistor R538 develops dc cathode bias which maintains the tube operating current at a safe level. A second 455-kc if signal is taken directly from the cathode through capacitor C542 to the grid of agc if amplifier V508. The cathode follower stage isolates the agc if amplifier from fourth if amplifier V504, preventing interaction between the two stages.

70. Automatic Gain Control Circuit

(fig. 38 and 39)

When the FUNCTION switch on the front panel of the receiver is set on the AGC position, agc bias is fed to the control grid circuits of tubes V201 through V204 in the rf subchassis and to tubes V501, V502, and V503 in the if subchassis. This agc bias controls the gain of the tubes in the rf and if subchassis in proportion to the average level of the incoming rf signal. This circuit extends the useful signal

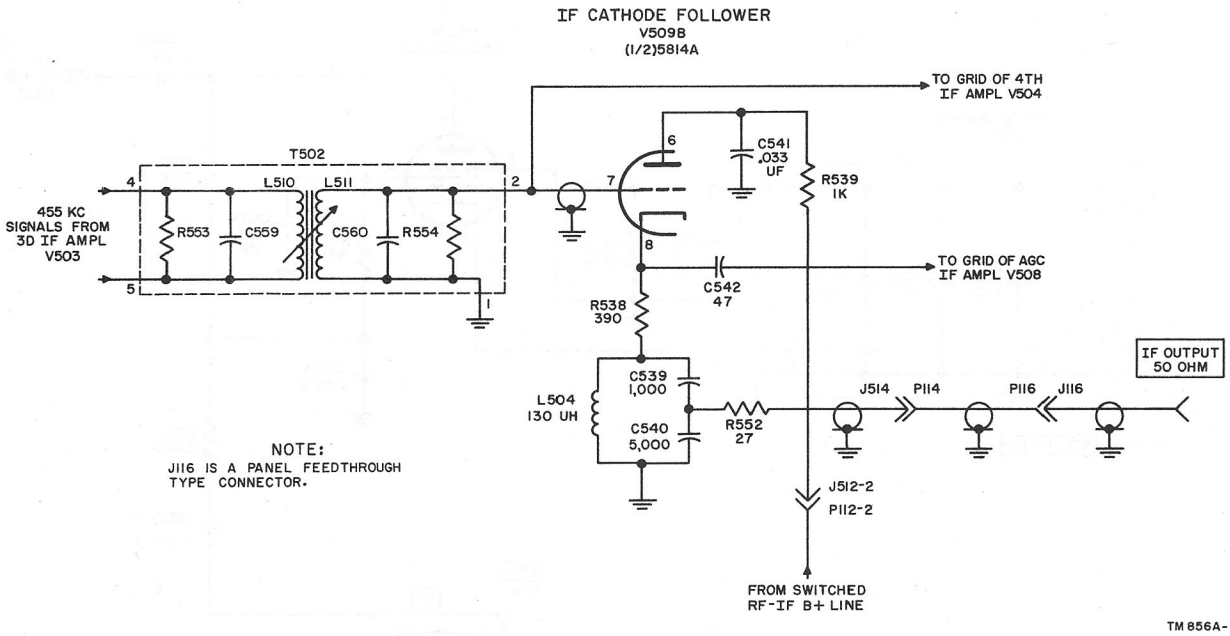

Figure 37. If cathode follower V509B, schematic diagram.

strength range of the receiver from a few microvolts to more than 1 volt. Signals appear to have a relatively constant signal strength. The agc circuit operates only for signals in excess of approximately 5 microvolts, in order not to reduce the gain of extremely weak signals. The AGC switch on the front panel of the receiver allows the operator to select one of three agc time-constant characteristics. These positions are SLOW, MED, and FAST, and are approximately 5 seconds, .3 second, and .015 second, respectively. This feature extends the usefulness of the agc circuit by enabling the operator to choose an agc time constant which most effectively compensates for fading rf signals. Three tubes are used in this agc circuit: agc if amplifier V508, which amplifies the voltage from the if cathode follower V509B; agc rectifier V509A, which rectifies the output of V508; and agc time-constant tube V506A, which is used as an electronic device for extending the time constant of the agc circuit when the AGC switch is set to the SLOW position. Figure 39 shows how the developed agc bias varies with antenna signal strength from 10 to 10,000 microvolts.

a. Agc If Amplifier. This stage (V508) amplifies the if signal from if cathode follower V509B. This signal is coupled through capacitor C542, and R540 is the grid return resistor to ground. Screen grid voltage is dropped and decoupled by the combination of R543 and C544. The developed agc bias from the junction of R546 and R547 is connected to the suppressor grid of V504 and V508 to use them as positive clamps to prevent the agc line from going more than a few volts positive. Plate voltage for the agc if amplifier is fed from the switched rf-if B+ line through connectors P112-2 and J512-2, the decoupling network of R542 and C545, and tuned circuit Z503. The amplified if output of V508 is then coupled to the agc rectifier through capacitor C546.

b. Delayed Agc. The purpose of delaying the application of agc to the rf and if circuits is to prevent the controlled tubes from having their gain reduced unless the incoming rf signal is 5 microvolts or stronger. Maximum receiver gain is therefore available for the weakest rf signals.

(1) The agc circuit depends on the action of the voltage divider from the B+ line, consisting of R544, R546, and R545. A slightly positive dc voltage is present at the junction of R546 and R547 and on the suppressor grids of V504 and V508. Contact potential developed at the grid of V506A reduces the positive voltage on the agc line,

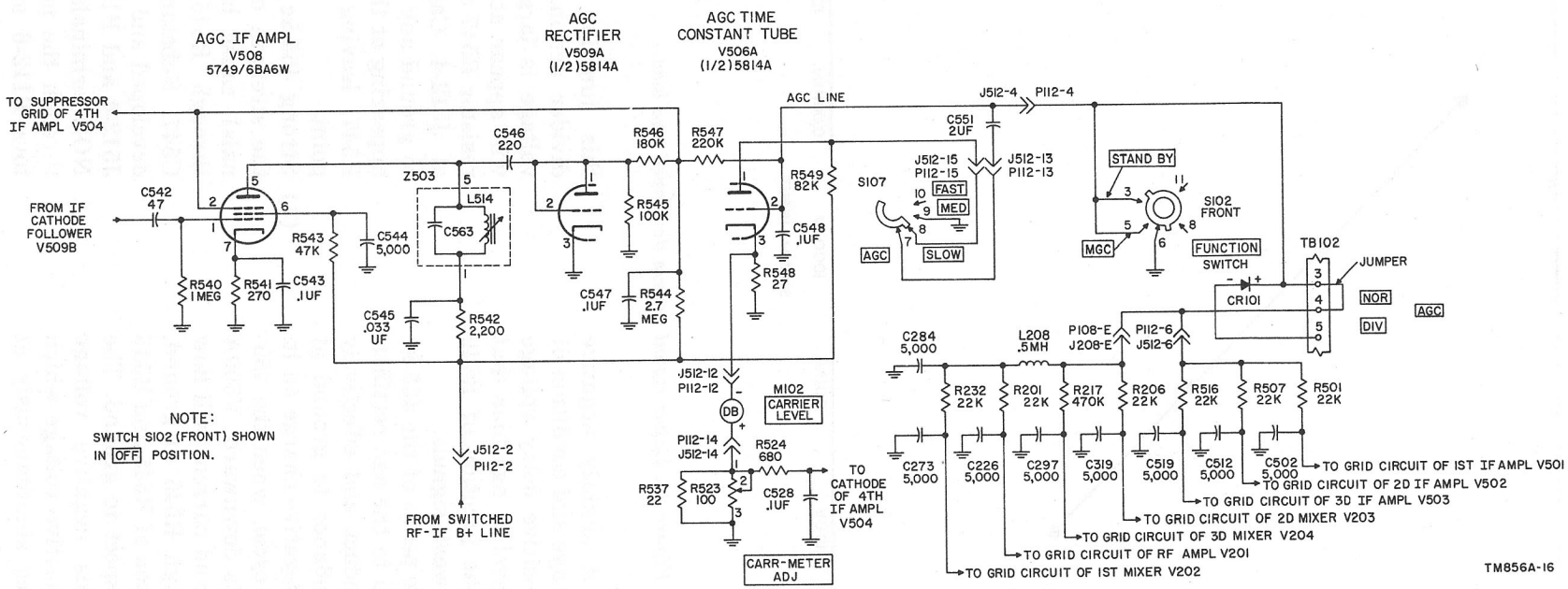

Figure 38. Agc circuit, schematic diagram.

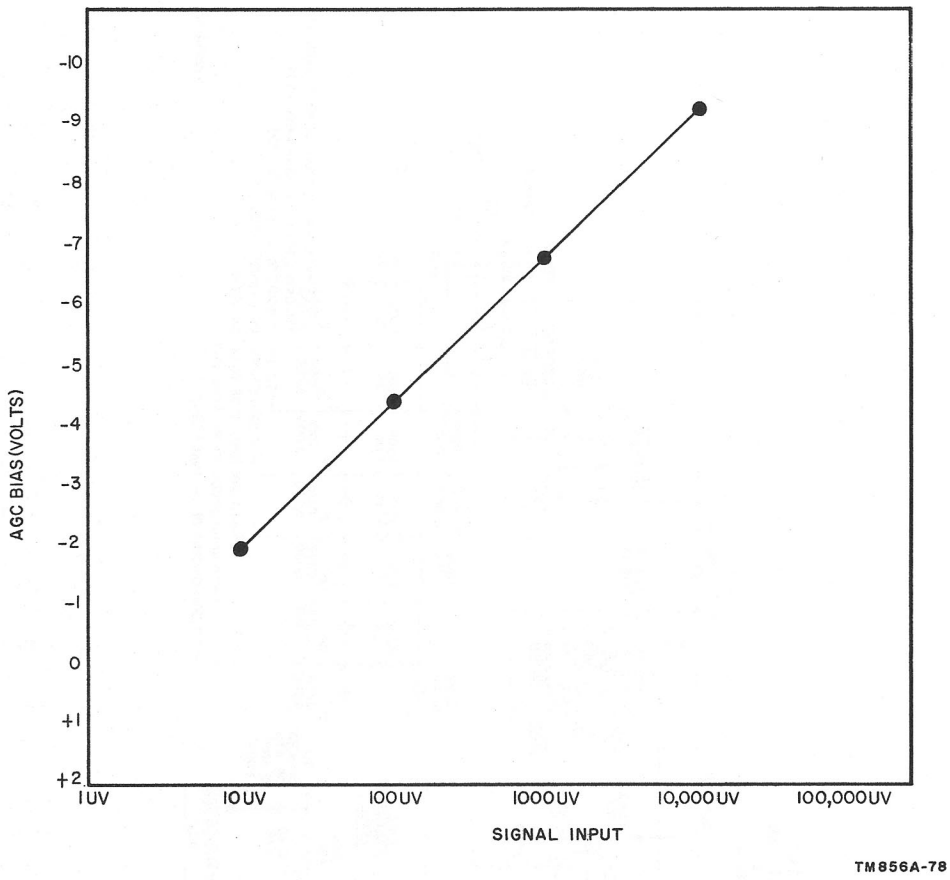

Figure 39. Imput signal versus developed agc bias.

and may make it slightly negative depending on the age and condition of the tube. This positive delay voltage offsets any low level of agc bias that is developed at the junction of R546 and R547 due to weak signals.

(2) When the positive peaks of the 455-kc signal are applied to the agc rectifier, the tube will conduct and effectively place a low impedance to ground at C546, putting a negative charge on it. On the next half-cycle, when the 455-kc signal swing is downward, V509A will not conduct and current will flow from C546 through R545 to ground, making the junction of R545 and R546 negative with respect to ground. The amplitude of this negative voltage depends on the positive voltage which is being developed simultaneously at this junction by the B+ voltage divider action. If the developed agc voltage is larger, a negative voltage will appear at both ends of isolation resistor R547 and also on the agc line at J512-4. Capacitor C547 bypasses to ground any audio or 455-kc signals appearing at the junction of R546 and R547, leaving only dc bias at this point.

(3) Strong 455-kc signals (depending on the strength of the incoming rf signals) cause larger currents to flow through R545, and thereby charge C547. Substantial agc bias will be developed and fed through connectors J512-4 and P112-4, through the AGC NOR terminals 3 and 4 of TB102, and through the mating pairs of connectors P112-6 and J512-6 to the first

three if amplifiers (V501, V502, and V503) in the if subchassis. Connectors P108-E and J208-E feed the same agc bias to the rf amplifier and the three mixer stages (V201 through V204) in the rf subchassis.

(4) When the FUNCTION switch is in the AGC position, the agc bias is applied to the controlled stages. However, when the FUNCTION switch is in the MGC position, the agc line and the grids of the controlled stage are grounded and no agc bias is allowed to get the controlled tubes. Under this condition the only control of the receiver rf and if gain is through the use of the front-panel RF GAIN control of the receiver (fig. 20, 30, and 33).

c. Time-constant System. The time constant of the agc system is the time required for the agc line to drop to 37 per cent of its full voltage when the signal producing the agc voltage is removed. Three levels of agc time constant are available. They are controlled by the AGC control, and the three positions are FAST, MED, and SLOW. The time constants are approximately .015 second, .3 second, and 5 seconds, respectively.

(1) *FAST.* In the FAST position, the ability of the agc circuits to follow fast-fading rf signals is maximum. With the AGC switch in this position the time constant depends upon the resistance-capacitance (RC) combination of R546 and C547, and R547 and C548, as well as each of the agc decoupling circuits for the individual controlled stages.

(2) *MED.* In the MED (medium) position, the agc line is influenced by the same RC combinations as in the FAST position, plus the additional capacitance of C551 in parallel to C548 through AGC switch S107.

(3) *SLOW.* In the SLOW position, the ability of the agc line to follow the fading signal is minimum. This is often useful for holding the receiver gain constant with on-off keying. It is more desirable than a rapid agc discharge, which would raise the noise level between characters. In the SLOW position, the RC combination used in the FAST position is used, plus the effective time constant produced by capacitor C551 connected to the plate of agc time constant tube V506A rather than to ground as in the MED position. The time constant in this SLOW position is approximately 16 times that achieved in the MED position. This is caused by the apparent Miller effect action of tube V506A. As the agc bias at the control grid of V506A goes more negative, the voltage drop across plate resistor R549 decreases and the plate voltage at pin 1 of V506A will rise. At this point, capacitor C551 begins to charge to the level of the agc voltage, as referenced to the B+ level at the plate of V506A. As this charging advances, the plate voltage of V506A continues to rise, and C551 continues hunting for a new voltage level as a reference for its charging rate. This bootstrap action continues until the grid of the tube V506A reaches the level of voltage at the junction R546 and R547. As C551 discharges, its rate of discharge is also retarded since the plate of V506A and the switch side of C551 gradually go less positive.

d. CARRIER LEVEL Meter Circuit (fig. 40 and 41). CARRIER LEVEL meter M102 indicates the relative strength of the incoming rf signal and is useful in tuning and calibrating the receiver. The meter is connected across agc time-constant tube V506A, cathode resistor R548, and two cathode resistors of fourth if amplifier tube V504. These two cathode resistors of V504 consist of CARR-METER ADJ potentiometer R523 and R537 in parallel. The remainder of the CARRIER LEVEL meter circuit is so arranged to form a bridge circuit with the meter connected to read the bridge unbalance. In the absence of an incoming rf signal and with the RF GAIN control fully

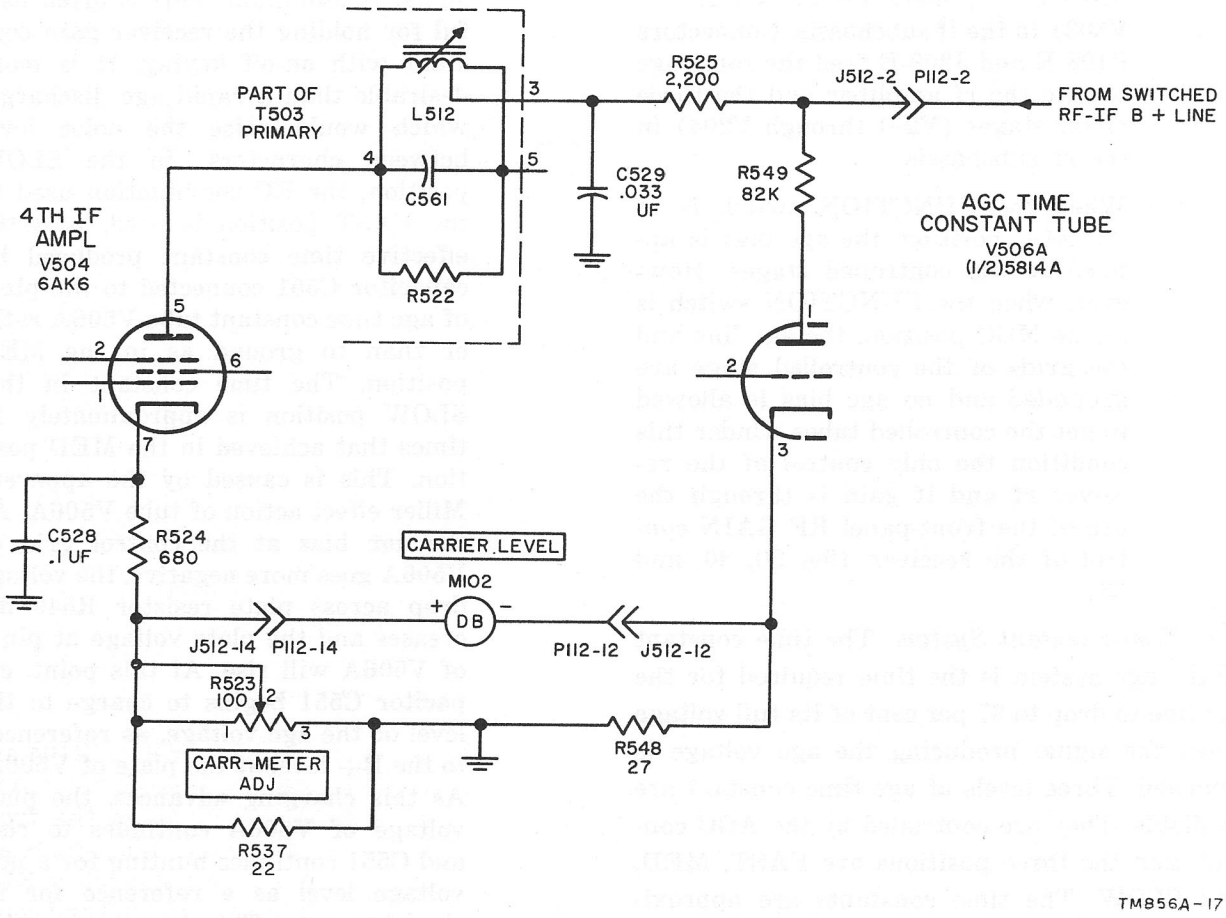

Figure 40. CARRIER LEVEL meter circuit, simplified schematic diagram.

counterclockwise, the current through V504 and V506A is adjusted with the CARR-METER ADJ control, located on the if subchassis, until the CARRIER LEVEL meter reads zero. At this time the currents through V504 and V506A are equal. As an rf signal is applied to the receiver, (RF GAIN control fully clockwise) the developed agc bias is applied to the control grid of V506A (fig. 38), and its plate current and the voltage drop across R548 decreases. Meter M102 then reads some value proportional to the level of the incoming rf signal. Electron current flows from ground; through R548; through J512-12 and P112-12; through M102; through P112-14 and J512-14 to the junction of R524 and R523 (which is at the higher potential than pin 3 of V506A); through cathode resistor R524; through V504 and its tuned circuit T503; through the decoupling network consisting of R525 and C529 to the switched rf-if B+ line. Figure 41 shows how CARRIER LEVEL meter M102 will indicate with various signal strengths fed into the receiver. When the FUNCTION switch is in the MGC position, the grid of V506A, pin 2, is grounded (fig. 104), and the CARRIER LEVEL meter will read zero unless the signal input to the grid of V504 is large enough to draw grid current. This condition indicates an overload, and the RF GAIN control should be turned counterclockwise until the CARRIER LEVEL meter once again reads zero.

e. Diversity Circuit. When two receivers are used in a diversity reception system, the jumper that is normally between terminals 3 and 4 is placed between terminals 4 and 5. This connects crystal diode CR101 into the circuits to prevent loading of the agc circuit of the controlling receiver by the agc circuit of the passive receiver.

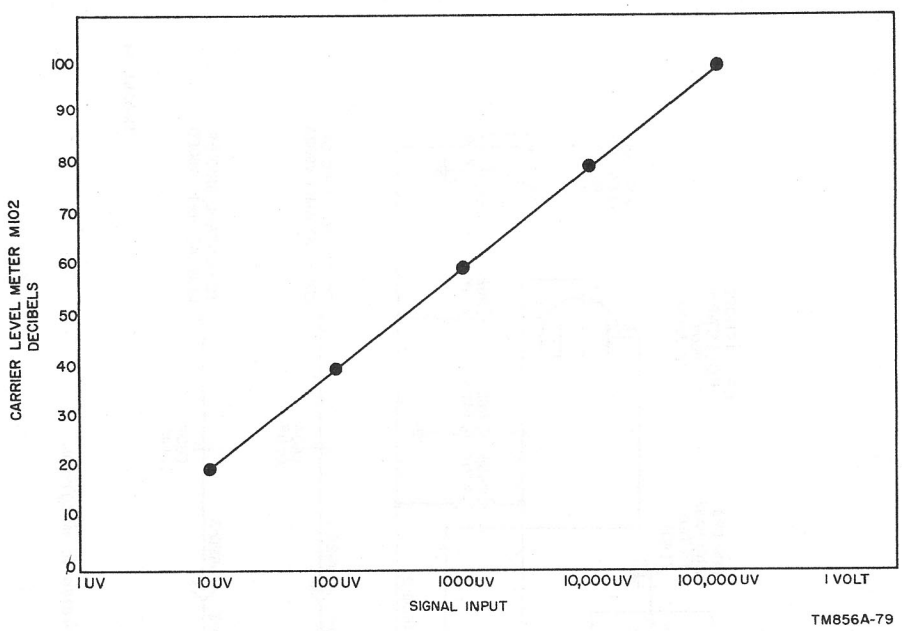

Figure 41. CARRIER LEVEL meter reading versus signal input.

71. First Af Amplifier and Af Cathode Follower (fig. 42)

The purpose of these two stages is to amplify the audio signals and provide a circuit that will distribute the audio signals to the local and line audio channels. The gain of V601A is less than 10 db, and the gain of V601B is less than unity.

a. Audio signals from limiter tube V507 are fed through P120-14 and J620-14, through isolation resistor R601 to the control grid of V601A. Resistor R603 is the grid resistor and R604 and C609 are the cathode-biasing resistor and bypass capacitor, respectively. Resistor R605 is the plate load resistor, and decoupling and hum filtering is accomplished with R606 and the two sections of electrolytic capacitor C603. The audio output of V601A is coupled (through C602) to terminal 9 of AUDIO RESPONSE switch S104, and is either fed straight through the switch to af cathode follower V601B (WIDE position) or through the switch and 800-cps band-pass filter FL601 (SHARP position) to af cathode follower V601B.

b. Amplified audio signals from terminal 3 of S104 are fed through connectors P120-4 and J620-4 to the control grid of af cathode follower V601B. The cathode of V601B is connected to ground through cathode resistor R627 in series the parallel-connected potentiometers R104 and R105. These are respectively the LINE GAIN and the LOCAL GAIN controls on the front panel of the receiver. The line audio signals are taken from the arm of potentiometer R104 through connectors P120-3 and J620-3 and coupling capacitor C607 to the control grid of line af amplifier V602B. Local audio signals are fed from the arm of potentiometer R105 through connectors P120-1 and J620-1 and coupling capacitor C604 to the control grid of local af amplifier V602A. The grid resistor of af cathode follower V601B, connected at the junction of R627 and the parallel combination of the LOCAL GAIN and LINE GAIN controls, is R608. Sufficient cathode bias prevents excessive plate current from flowing when the BREAK IN switch (fig. 45) causes relay K601 contacts 6 and 2 to close and ground the lower end of R627. When S104 is in the WIDE position, capacitor C601 and resistor R602 connect the audio signal present at the junction of R627 and the R104, R105 combination to the grid of the first af amplifier. This introduces negative feedback into the V601A circuit and reduces the gain of this stage approximately 5 db. The negative feedback reduces distortion in these two stages. This gain loss is comparable to the loss in FL601 in the SHARP position.

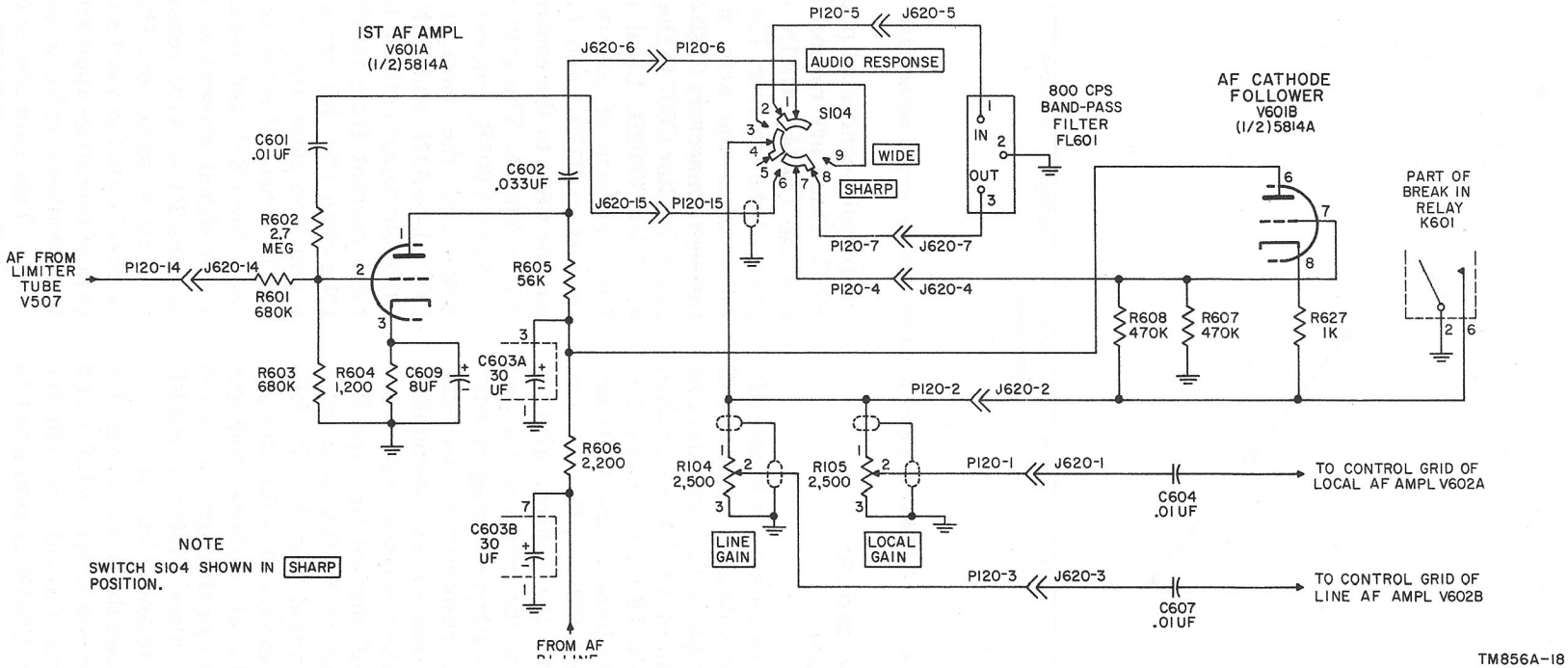

Figure 42. First af amplifier V601A and af cathode follower V601B, schematic diagram.

72. Local Audio Channel

(fig. 43)

Local af amplifier stage V602A, which is one half of a miniature twin triode type 5814A, amplifies the audio signal from LOCAL GAIN control R105 and drives local af output tube V603, a 6AK6 miniature pentode power amplifier.

a. Tube V602A develops cathode bias by the current flow through R615 and R610. The plate load resistor for V602A is R611, and plate voltage is supplied from the af B+ line. Resistor R609 is the grid return to ground. The grid resistor for tube V603 is R613, and cathode bias is developed across resistors R614 and R615; R615 is a common cathode-biasing resistor for V602A and V603. Plate and screen grid voltages for this tube are also supplied from the af B+ line.

b. Audio signals from LOCAL GAIN control R105 are fed through connectors P120-1 and J620-1 through coupling capacitor C604 to the control grid of V602A. The amplified audio output of this stage is coupled to the control grid of V603 through C605. The primary of audio output transformer T601 is the plate load for V603. The audio signals are induced in the series-connected secondary windings and are fed from terminal 3 through connectors J619-9 and P119-9 to TB102. Terminals 6 and 7 are 600-ohm LOCAL AUDIO connectors for this channel. The maximum audio output is at least 500 milliwatts. The same audio signal is passed through an attenuator, which consists of R101 and R102 to terminal 8, the PHNS terminal of TB102, and the PHONES jack J102 on the front panel of the receiver. The maximum output at these connections is at least 1 milliwatt.

c. Three feed-back paths are used in the local audio channel to improve impedance matching and stabilize the gain of this channel. The first feed-back circuit is regenerative and is accomplished by using resistor R615 as a common cathode resistor for V602A and V603. The second feed-back path is degenerative through resistor R612 from the plate of V603 to the cathode of V602A. The third feed-back circuit, also degenerative, is accomplished by not bypassing the cathodes of V602A and V603.

73. Line Audio Channel

(fig. 44)

The line audio channel, which is similar to the local audio channel, includes a LINE LEVEL meter and a LINE METER switch for measuring and calibrating the LINE LEVEL meter. The maximum output of this circuit exceeds 10 milliwatts when matched into a 600-ohm impedance, and is available for teletypewriter operation.

a. Cathode biasing for V602B and V604 is accomplished with resistors R621 and R625, respectively, and common bias resistor R623. Resistors R620 and R624 are the grid return resistors for their respective tubes. Plate voltage for V602B is fed from the af B+ line to the plate of V602B through its plate load resistor R622. Plate and screen grid voltage for V604 is obtained from the same source.

b. Audio signals from LINE GAIN control R104 are fed through connectors P120-3 and J620-3 and coupling capacitor C607 to the control grid of line af amplifier V602B, one half of a miniature twin triode type 5814A. The signal is amplified and coupled through C608 to the control grid of line af output tube V604, a miniature pentode power amplifier type 6AK6. The audio signals developed in the primary of audio output transformer T602 are induced into the secondary windings of T602. A 600-ohm output impedance exists across terminals 3 and 6 of T602 when the LINE AUDIO terminals 11 and 12 on TB103 are connected with a jumper. This connection is made through the two pairs of mating connectors J620-10 and P120-10 and J620-9 and P120-9. The 600-ohm audio signals from terminals 3 and 6 of T602 are fed through the mating pairs of connectors J620-12 and P120-12 and J620-8 and P120-8 through a 14-db attenuator to terminals 10 and 13, the LINE AUDIO connections on TB103. Five resistors, R111 through R115, are the circuit elements of this H-type attenuator. A 600-ohm load is maintained on the secondary of T602 when a 600-ohm load is present at the LINE AUDIO terminals.

c. Three feed-back loops, similar to those used on the local audio channel, are employed. Regenerative feedback is accomplished by common cathode resistor R623, and degenerative feedback is accomplished by the connection of resistor R626 between the plate of V604 and the

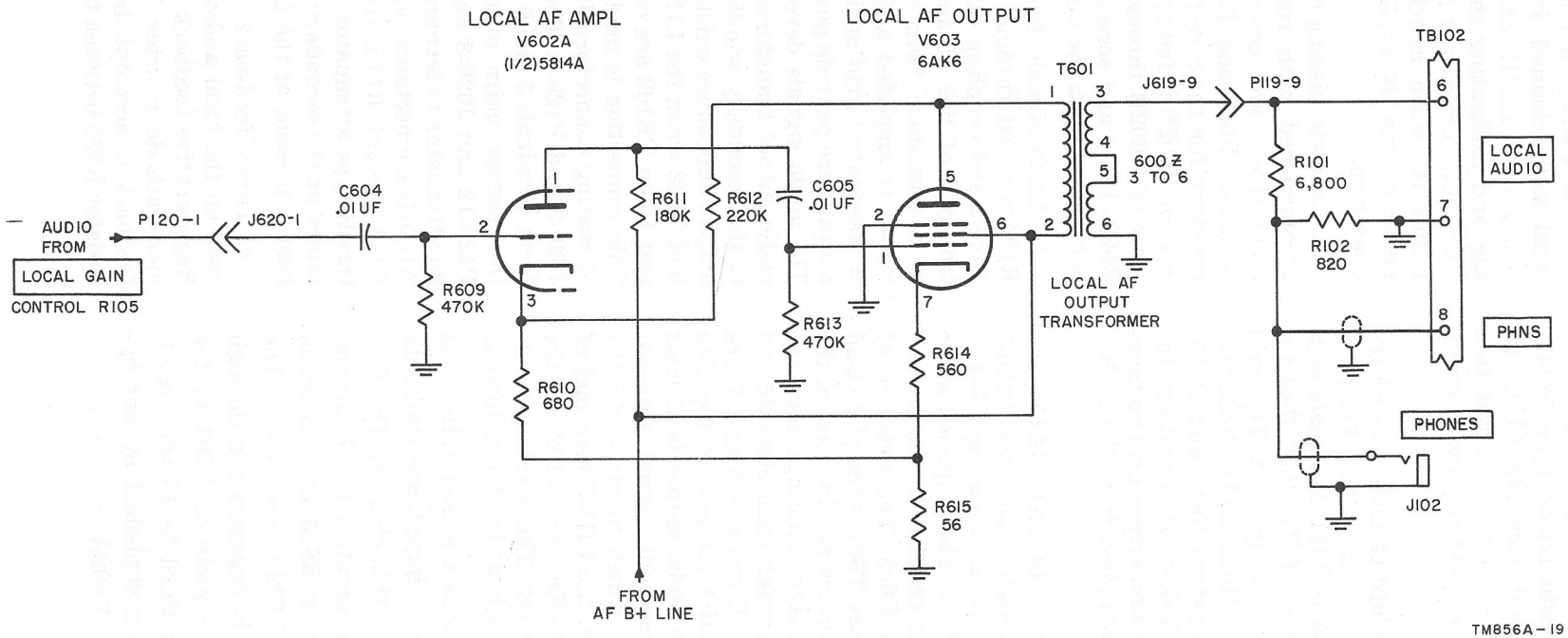

Figure 43. Local audio channel, schematic diagram.

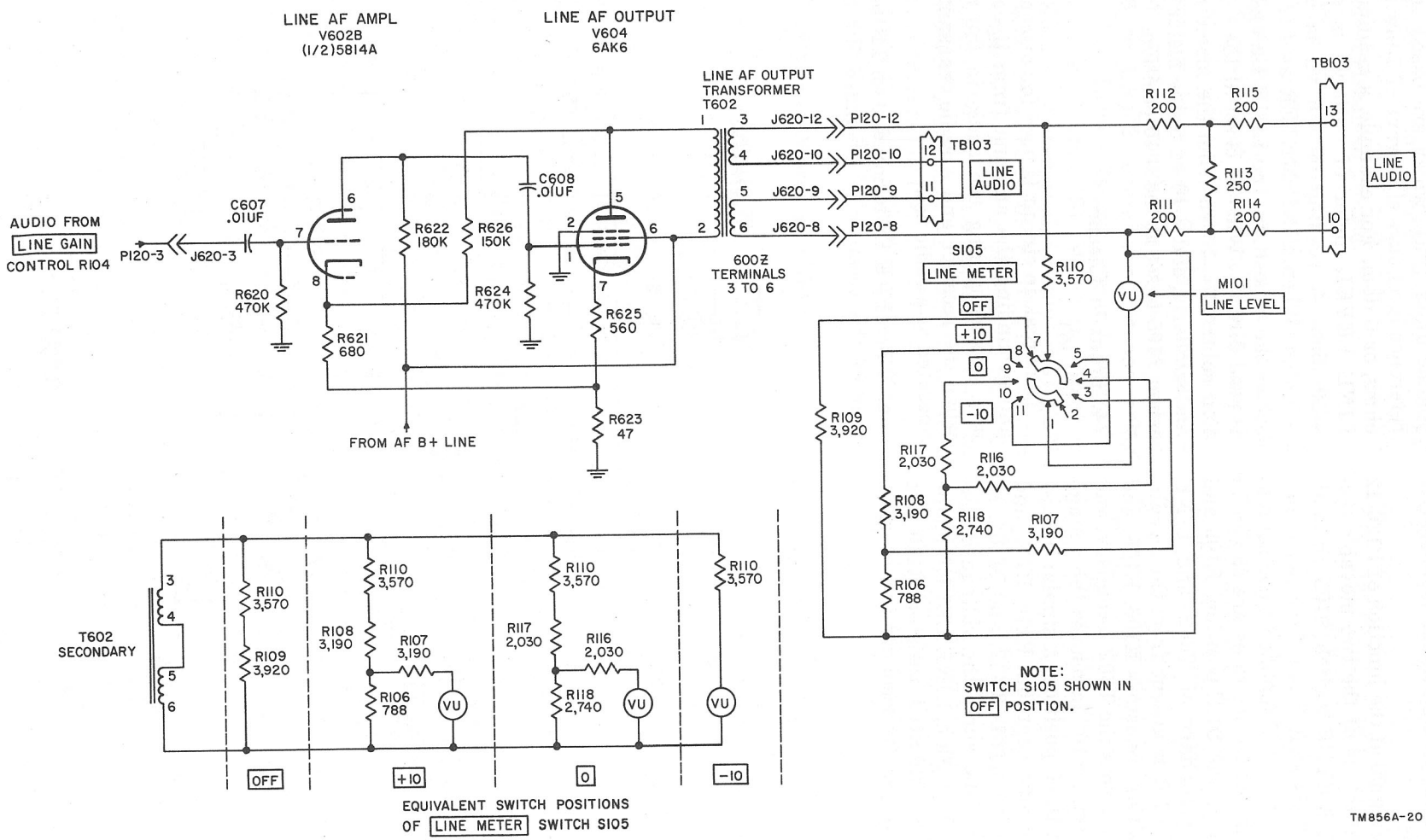

Figure 44. Line audio channel, schematic diagram.

cathode of V602B. The unbypassed cathodes of these two stages supply additional degenerative cathode feedback.

d. The audio signal at the junction of P120-12 and R112 is fed to one of the two movable sections of LINE METER switch S105 through resistor R110. This switch has four positions: OFF, +10, 0, and —10. Simplified basic equivalents of the four switch positions are shown in figure 44. When in the OFF position, R109 and R110 load the secondary of T602, and LINE LEVEL meter M101 is absent from the circuit. In the +10 position, resistors R106, R108, and R110 are placed across the T602 secondary, and M101 in series with R107 measures the voltage across R106. In the 0 position, a similar circuit combination is used except that R110, R117, and R118 are in series across T602, and M101, in series with R116, measures the voltage across R118. In the —10 position, LINE LEVEL meter M101 and series-connected resistor R110 are placed directly across the secondary winding of T602.

e. LINE LEVEL meter M101 is calibrated in volume units (vu), which are based on a zero reference level pure sine wave of 1 mw into 600 ohms, or 0 dbm. For example, a reading on the LINE LEVEL meter of —10 vu is equal to —10 dbm. A reading of +5 vu is equal to +5 dbm. When LINE METER switch S105 is set at the 0 position, the LINE LEVEL meter is read directly. When it is set at the —10 position subtract —10 vu from the meter reading, and similarly, add +10 vu to the meter reading when S105 is set at the +10 position.

74. Break-in Circuit

(fig. 45)

The break-in circuit is used for disconnecting and grounding the antenna from the receiver and also grounding the audio in the receiver when the receiver and a radio transmitter are operated as a radio set.

a. When BRK IN terminal 9 on TB103 at the rear of the receiver is grounded through the

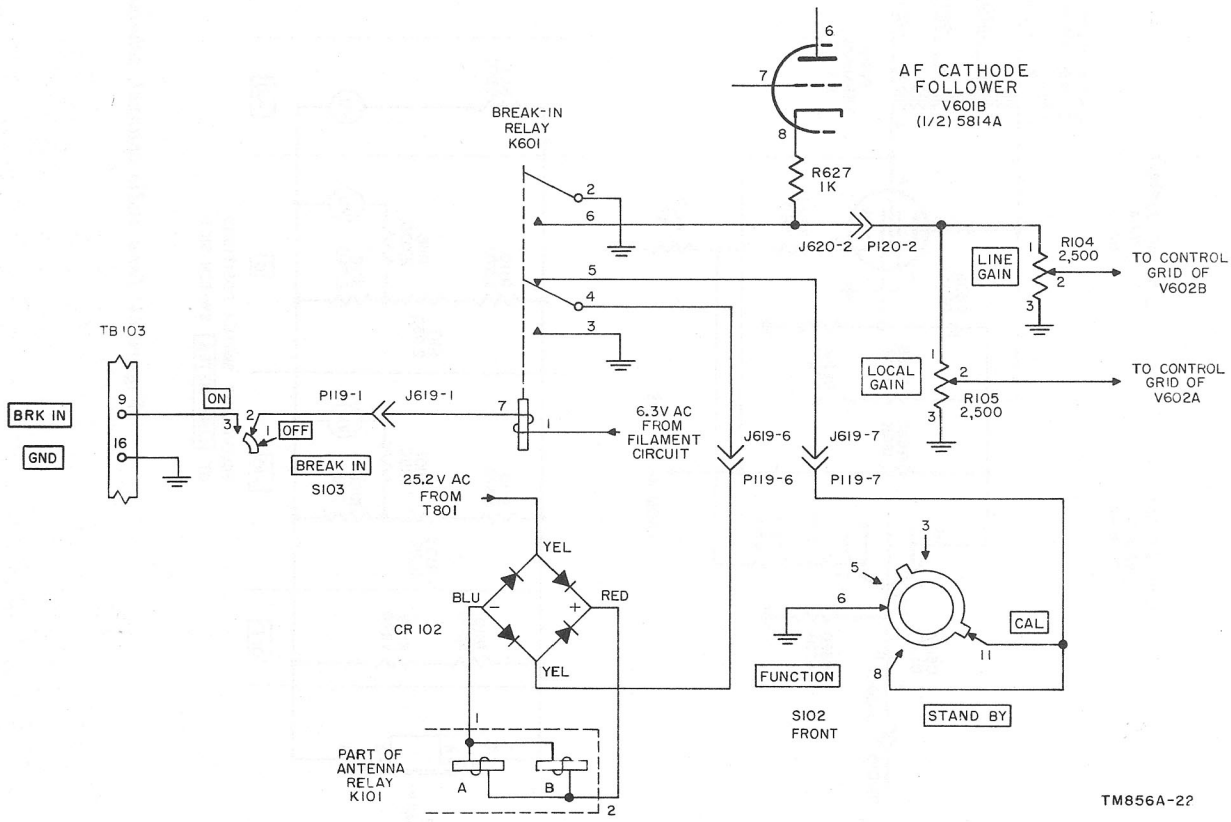

Figure 45. Break-in circuit, schematic diagram.

GND terminal 16, and BREAK IN switch S103 is in the ON position, current will flow through the coil of break-in relay K601 from the 6.3-volt ac filament circuit to ground.

b. When the break-in circuit is actuated and break-in relay K601 is operated, terminals 2 and 6 and terminals 3 and 4 make contact. Terminals 2 and 6 ground out the audio signal input to the local and line af amplifier stages, silencing the receiver. Terminals 3 and 4 complete a ground circuit through connectors J619-6 and P119-6 to CR102, energizing antenna relay K101. This disconnects and grounds the antenna signal input (fig. 18). When the break-in relay K601 is de-energized, antenna relay K101 can also be energized by the FUNCTION switch when the latter is placed in the CAL or STAND BY position. This ground is applied through the CAL or STAND BY position of the FUNCTION switch, connectors P119-7 and J619-7, contacts 5 and 4 of K601, and J619-6 and P119-6, to the same connection of CR102.

75. Calibration Markers, 100-kc
(fig. 46)

In order to calibrate the receiver at 100-kc intervals over its entire range, a calibration circuit consisting of the calibration oscillator V205A, the 100-kc multivibrator V206 and the 100-kc cathode follower V205B are used. Both of these tubes are minature twin triode types 5814A. A crystal oscillator generates a 200-kc signal which synchronizes a 100-kc multivibrator. The output from this multivibrator consists of nonsinusoidal waves, producing many 100-kc harmonics. This stage drives a cathode follower which, in turn, feeds this source of 100-kc markers to rf amplifier V201.

a. Calibration oscillator V205A is essentially a Pierce crystal oscillator. Resistor R220 is a dc grid return to ground and resistor R221 is the plate load resistor. Capacitor C312 at the plate of the calibration oscillator provides a feed-back path to sustain oscillation. The 200-kc crystal Y203 is connected between the control grid and the plate through capacitor C311. Crystal Y203 is kept at a constant temperature by crystal oven HR202. Trimmer capacitor C310 provides a means of making very small frequency adjustments. The calibration circuit harmonics can be checked against a secondary frequency standard or one of the test signals from station WWV. Capacitor C313 couples the 200-kc signal into the grid circuits of 100-kc multivibrator V206 at the junction of grid resistors R225 and R222 and the common grid resistor R223.

b. Tube V206 is a conventional multivibrator with the plates of each section coupled back to grid circuits of the other section to sustain oscillation. The frequency of oscillation is chiefly determined by the time constants determined by the values of grid resistors R222 and R225 and coupling capacitors C314 and C315. Resistors R224 and R226 are the plate load resistors for the halves of this twin triode. Capacitor C316 couples 100-kc harmonics to the grid of V205B, placing a high grid circuit impedance across V206. The output of V205B is developed across L210 and R229. Coil L210 resonates with circuit and output cable capacitance above 32 mc, and provides high-frequency compensation to the 100-kc harmonics at the higher frequencies in order to maintain all of the 100-kc markers at approximately the same amplitude at the control grid of rf amplifier V201. Resistor R229 provides the load for the lower frequency harmonics and also prevents the stage from drawing excessive cathode current. The 100-kc harmonics are fed through coaxial cable and the small 1-uuf coupling capacitor C228 to the control grid of rf amplifier V201. The plate of V205B is kept at rf ground potential through the decoupling network consisting of R228 and C320. Plate voltage for all three stages is applied through rf filter choke L211, bypassed by C317, when FUNCTION switch S102 is in the CAL position.

76. Power Circuits
(fig. 47, 102, and 103)

a. Power Supply. Plate and screen-grid voltage for all the tubes in Radio Receiver R390A/URR is supplied by the power supply subchassis. This subchassis (fig. 57) consists of power transformer T801 on which is mounted a small chassis which accommodates rectifier tubes V801 and V802 and terminal board TB801. The plate sections of each rectifier are connected in parallel and each tube functions as a half-wave rectifier across the ends of the center-tapped high-voltage winding (terminals 5, 6, and 7). Rectifiers V801 and V802 rectify this ac voltage (570 volts, terminals 5 to 7) and feed

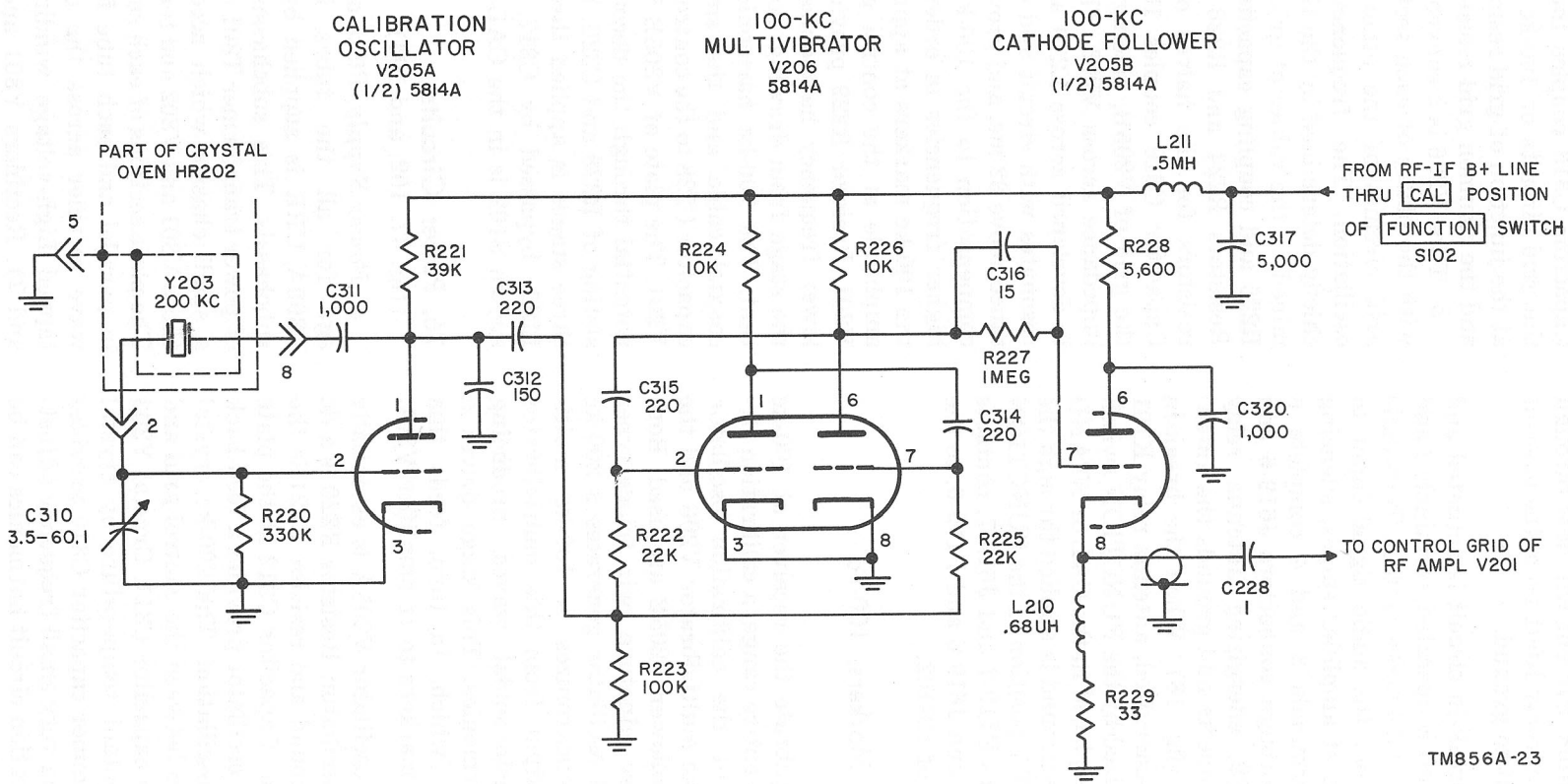

Figure 46. Calibration circuit, 100-kc schematic diagram

this unfiltered dc voltage from the cathodes through connectors J811-5 and P111-5, and through connectors P119-5 and J619-5 (fig. 103) to terminal 1 of swinging filter choke L601. The B+ distribution divides at terminal 2 of L601 and follows three separate paths. The af B+ path is through filter choke L603 to the af subchassis. The rf-if B+ line through filter choke L602 and connectors J619-2 and P119-2 supplies the plate circuits of first and second crystal oscillators V207 and V401 and variable-frequency oscillator V701. Terminal 6 of FUNCTION switch S102 is also connected to the rf-if B+ line, and through its terminal 7 feeds this B+ voltage to all the plate and screen circuits in the rf subchassis (except the calibration oscillator and the 100-kc multivibrator) and if subchassis (except the bfo stage). BFO switch S101 also connects to this point. This B+ line is called the switched rf-if B+ line, and is energized when FUNCTION switch S102 is on the AGC, MGC or CAL position. The screen grids of both crystal oscillators V207 and V401 and the variable-frequency oscillator V701 require a source of regulated B+ voltage. This is supplied by voltage regulator tube V605, which maintains a constant positive 150 volts across its terminals under conditions of varying loads. This voltage is regulated at terminals 1 and 5 of V605, and fed through connectors J619-4 and P119-4 to the screen grid circuits of V207, V401, and V701. This B+ line is called the +150 volt regulated line. Resistor R619, when not shorted out by the FUNCTION switch, inserts additional resistance into the voltage-dropping circuit which includes resistors R617 and R618. These three resistors drop the voltage between terminal 2 of L601 and the constant 150 volt drop across V605. When FUNCTION switch S102 is in the STAND BY position, plate and screen voltage for most of the tubes in the rf subchassis and if subchassis is removed and the voltage at L601 tends to rise. This voltage rise would cause excessive current through V605, in excess of the 30 milliamperes which is the current rating of the tube. Resistor R619 is allowed to remain in this voltage-dropping circuit only when the FUNCTION switch is in the STAND BY position, protecting V605. When the FUNCTION switch is turned to the AGC, MGC, or CAL position, resistor R619 is short-circuited.

b. Filament and Oven Circuits (fig. 102). Filament voltage for all the tubes in the receiver except V505, V701, V801, and V802 are obtained from the 6.3-volt ac line, which is obtained from the filament (terminals 11 and 12) secondary winding of power transformer T801. Filament voltage for tubes V201 through V204 and V206 and V207 in the rf subchassis are made through connectors P108-B and J208-B. Rf choke coils L202 through L207 and capacitors C300 through C305 decouple rf and prevent rf currents from entering or leaving the filament circuits. Tubes V501 through V504 and V506 through V509 obtain 6.3-volt filament power through connectors P112-20 and J512-20. Resistor R536, a 4-ohm resistor, reduces the filament current to limiter tube V507 to approximately 5.3 volts. This does not impair operation of the stage but does reduce the filament hum generated by this stage. Connectors P119-10 and J619-10 connect 6.3 volts ac directly to the filaments of all the tubes in the af subchassis. Tube V401 in the crystal oscillator subchassis receives 6.3 volts ac through connectors P110-B and J410-B. Rf filament choke L402 and capacitors C414 and C415 bypass rf signals to ground at the filament rf this tube. Secondary winding 8, 9, and 10 of power transformer T801 supplies 25.2 volts ac to the heaters of rectifiers V801 and V802. This 25.2 ac source is also fed through connectors J811-1 and P111-1 to bridge rectifier CR102. The rectified voltage, approximately 20 volts dc, is used to energize antenna relay K101 when the yellow lead at the output side of the bridge is grounded through the closed contacts 4 and 3 or 4 and 5 of break-in relay K601 (fig. 45). The 25.2 volts ac is further used to supply filament voltage to tube V505 and tube V701 in series with each other and with current regulator RT510. This circuit maintains the filament current of these critical frequency-determining circuits constant under conditions of varying line voltage. Capacitors C538 and C712 and rf choke L706 decouple rf from the filament circuit. Crystal oven HR202 is operated by 6.3 volts ac through connectors P108-F and J208-F, and is in operation at all times that power is applied to transformer T801. Ovens HR701 and HR401 receive 25.2 volts ac for their heater circuits when OVENS switch S106 is in the ON position. This switch should be operated only when the receiver is operated in low temperature surroundings or when the ultimate in frequency stability is necessary.

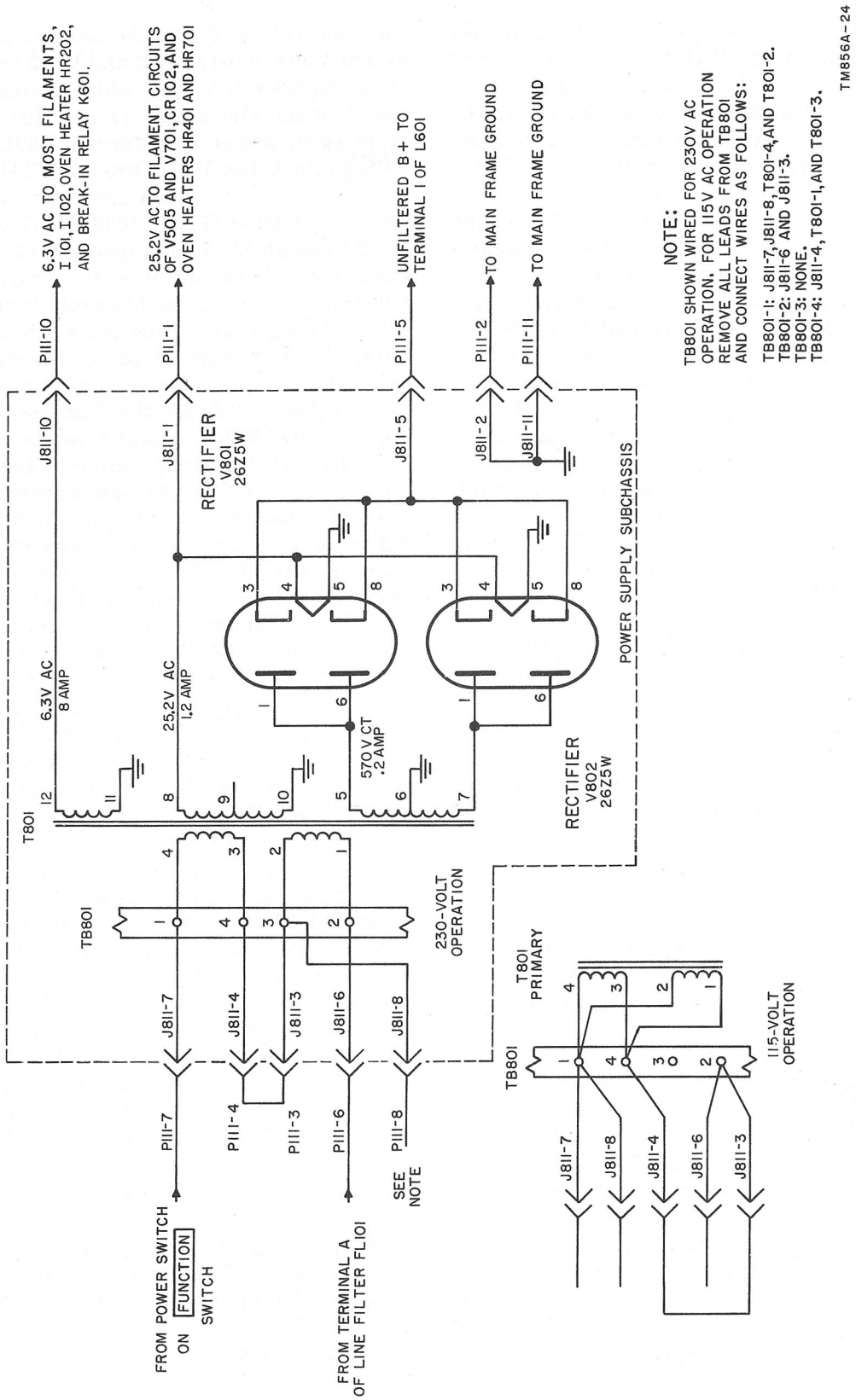

Figure 47. Power supply subchassis, schematic diagram.

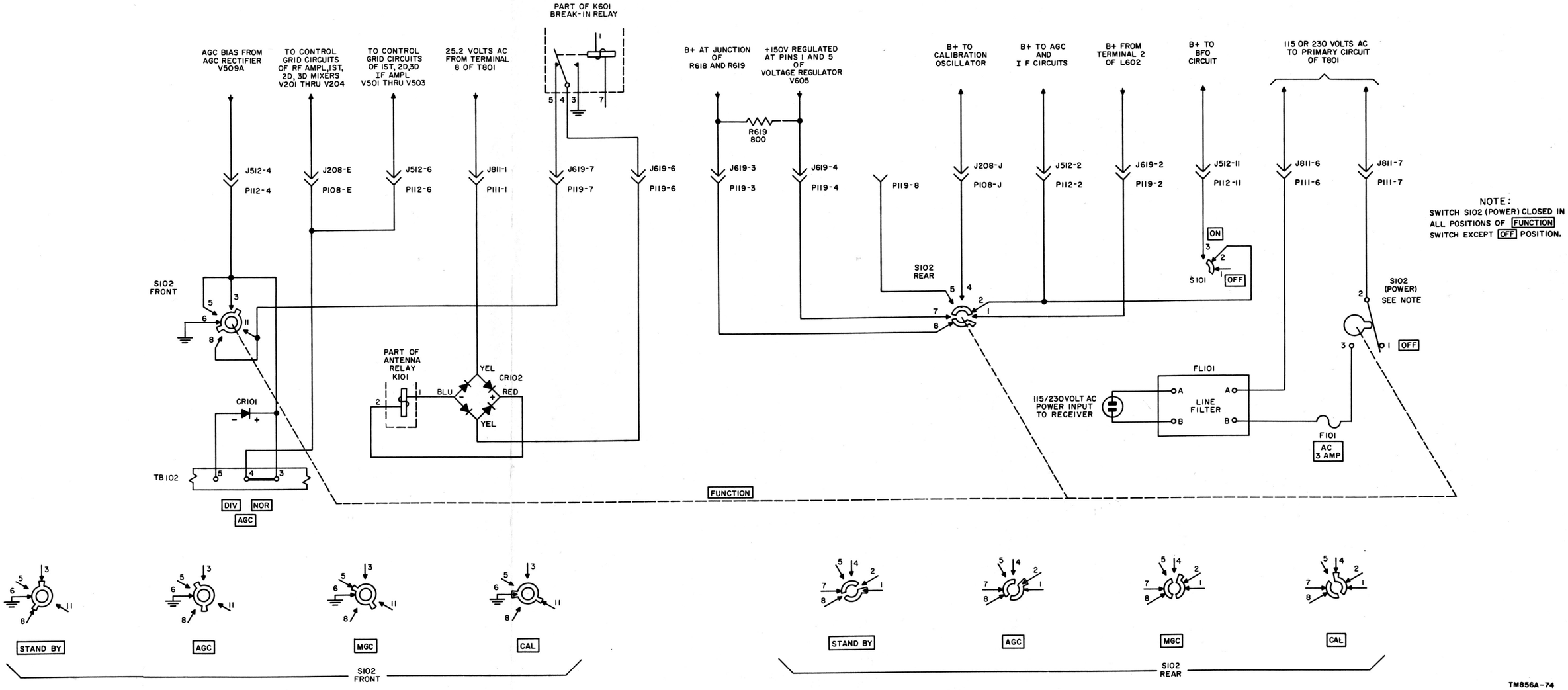

Figure 48. FUNCTION switch S102, schematic diagram.

77. FUNCTION Switch

(fig. 48)

FUNCTION switch S102 selects the various types of operation of the receiver.

a. OFF. When the FUNCTION switch is in the OFF position, the power switch is open and line voltage is disconnected from the primary circuit of power transformer T801.

b. STAND BY. When in the STAND BY position, ac power is applied to the primary circuit of T801, and ground is connected through terminal 2 of the front section of this switch through terminals 5 and 4 of K601 which grounds the yellow terminal of K101. This applies 20 volts dc to energize the antenna relay K101, opening and grounding the antenna circuit of the receiver. Resistor R619 is placed in the +150 volt regulated B+ circuit by the rear section of S102 to protect V605 (par. 76*a*).

c. AGC. In the AGC position, ac power is also applied to the primary of T801. The rear section of this switch connects plate voltage from the rf-if B+ line to the rf and if subchassis. Resistor R619, part of the voltage regulator dropping resistor circuit, is short-circuited to maintain proper operating conditions for the voltage regulator. The agc line, at the AGC terminal 4 of TB102 is ungrounded, allowing the agc bias to control the receiver gain.

d. MGC. In the MGC position, ac power to T801 and plate and screen grid voltage to the rf and if subchassis are applied, but the agc line is short-circuited to ground. Under this condition, the only control of receiver sensitivity is maintained by RF GAIN control R103.

e. CAL. In this position, ac power to T801 and plate and screen grid voltage to the rf and if subchassis are supplied. In addition, plate voltage for the calibration oscillator circuit is applied from the rf-if B+ line through connectors P108J, and J208-J. At the same time, antenna relay K101 is operated and the antenna disconnected from the receiver and grounded. This allows only calibration markers at 100-kc intervals to pass through the receiver circuits.

78. External Control Circuits

a. General. The receiver alone is capable of furnishing reception when it is connected to an ac power source, a suitable antenna, and a headset or a loudspeaker. In many installations the receiver will be used as part of a receiving system. Under such conditions, external control and use of the receiver functions is necessary.

b. Break-in Connection. When the receiver is operated in conjunction with a transmitter, and receiver disabling is desired during transmitting periods, BRK IN terminal 9 on the rear panel of the receiver must be grounded at the transmitter. In addition, the BREAK IN switch on the front panel of the receiver must be set at the ON position. During transmitting periods the antenna input and the audio circuits are grounded. Refer to paragraph 74. Receiver disabling may be removed for netting by setting the BRK IN switch at OFF.

c. DIODE LOAD Connection. Under conditions of diversity reception of voice signals, diode-load combining of the output of two or more receivers may be used. The jumper between terminals 14 and 15 of one receiver is removed and terminals 14 of both receivers are then connected together. With this connection, the diode detectors of both receivers are connected to the diode load resistor of the receiver with the connection between terminals 14 and 15. As the signal fades alternately in the two receivers, the diode detector having the larger signal develops a voltage across the load that cuts off the diode. Thus the receiver with the larger signal always develops the signal in the audio output. The audio signal is taken from the receiver with the connection between terminals 14 and 15.

d. AGC Connection. Under some conditions of diversity reception, an improvement in signal-to-noise ratio may be had by common connection of the agc systems of the two receivers. The jumpers of the two receivers between terminals 3 and 4 are moved to 4 and 5, and terminals 4 of the two receivers are connected together. Normally, when a receiver goes into a deep fade, the agc system increases receiver gain and noise output is increased. With the common connections, agc voltage from the receiver having the larger signal develops an agc voltage that lowers the gain of the noisy receiver.

e. External RF GAIN Control Connection. In some applications it is necessary to control the gain of the receiver at a remote location. This is accomplished by connecting an rf gain control to the RF GAIN terminal on the rear panel of the receiver as explained in paragraphs 55, 63, and 66.

Section III. ANALYSIS OF MECHANICAL TUNING SYSTEM

79. General Principles of Operation

(fig. 49)

a. General. The mechanical tuning system of Radio Receiver R-390A/URR controls the permeability tuning and switching to provide continuous linear tuning over a range of .5 to 32 mc in 32 steps. Each step, or band of the MEGACYCLE CHANGE control (except the first band), is tuned linearly over a range of 1 mc. The first band is tuned from .5 to 1 mc. Although the counter can be set between 00 000 and 00 500, no signal reception is possible. The frequency to which the receiver is tuned is indicated on a counter-type dial, which indicates the frequency in kilocycles. Figure 49 is a simplified block diagram of the mechanical tuning system.

b. MEGACYCLE CHANGE Control. Operation of the MEGACYCLE CHANGE control is limited to 10 turns by a progressive mechanical stop. As the control is turned, the first two number wheels on the counter-type dial are rotated, and the numbers coincide with the frequency of reception in thousands of kilocycles (megacycles) from 0 through 31. At the same time, the 32-position crystal selector switch is switched to one of 32 positions. The rf band switches are also operated by this control through the intermittent gear and overtravel coupler. This system operates the band switches at precisely the correct time as the MEGACYCLE CHANGE control is continuously turned. The MEGACYCLE CHANGE control also controls the positioning of all slug racks except the .5- to 1-mc, 1-2 mc antenna and rf slug racks, and second variable if slug racks through the differential.

c. KILOCYCLE CHANGE Control. The KILOCYCLE CHANGE control is connected directly through a 10-turn stop to the vfo, the second variable if, and the slug racks of the .5- to 1-mc and 1- to 2-mc antenna and rf slug

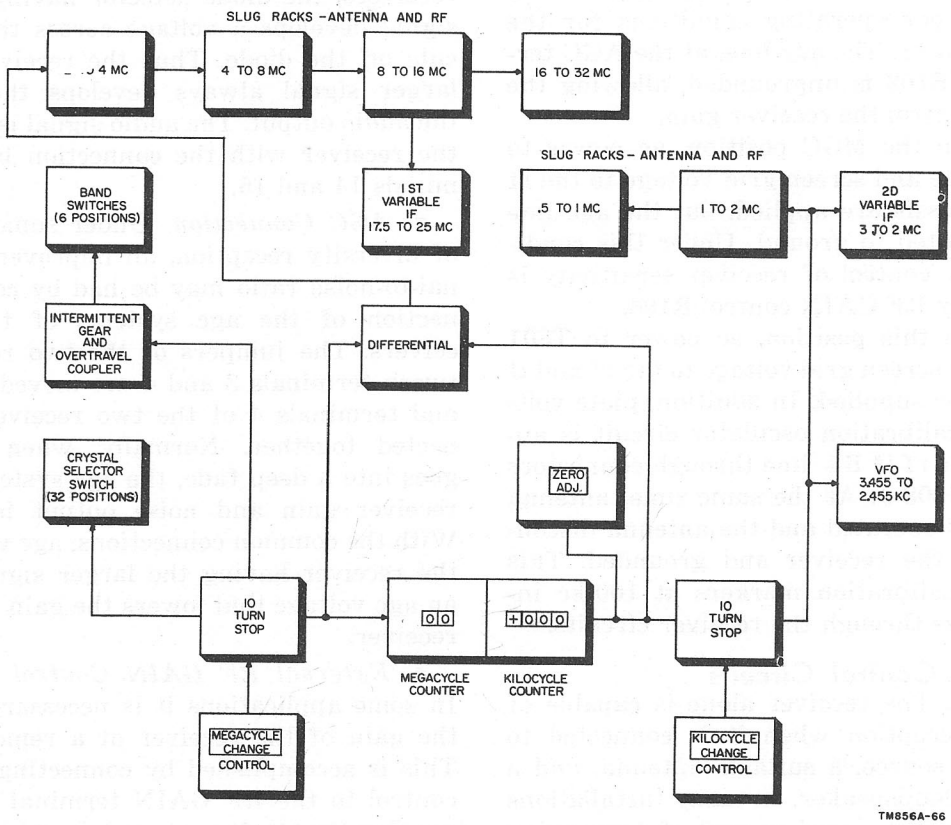

Fig. 49. Tuning system, mechanical, block diagram.

racks. The KILOCYCLE CHANGE knob is also connected through the same differential as the MEGACYCLE CHANGE knob. The KILOCYCLE CHANGE knob provides the movement for the 2- to 4-mc, 4- to 8-mc, 8- to 16-mc, and the 16- to 32-mc antenna and rf slug racks and the first variable if slug racks from the starting point established by the MEGACYCLE CHANGE knob. A ZERO ADJ knob on the front panel of the receiver allows frequency dial correction over a small range in order to align the receiver frequency with the frequency-counter reading.

80. Functional Analysis

(fig. 50)

a. General. Figure 50 gives a more detailed description of the operation of the mechanical tuning system. A detailed study of the mechanical alignment, disassembly, and reassembly of the tuning assembly should be made in connection with the following analysis. In order to tune continuously from .5 to 32 mc at a linear rate, not only must the correct coils and transformers be selected but the slugs must be moved at the proper rate to tune numerous coils and rf tranformers simultaneously. For example, to cover the .5 to 1-mc band, the slugs in coils T201 and Z201 move over their entire range, a distance of approximately eight-tenths of an inch. At the same time the slugs in the coils of Z213 move approximately five-hundredths of an inch in covering this range. This tuning is controlled with a single knob by means of numerous gears and cams.

b. KILOCYCLE CHANGE Knob. Starting with the right-hand side of figure 50, it will be seen that the KILOCYCLE CHANGE knob tunes the vfo directly through the 10-turn progressive stop. Also connected to this control (dotted lines) are the second variable if slug rack (3 to 2 mc) and the antenna and rf slug racks for the coils covering the .5- to 1-mc and the 1- to 2-mc bands.

c. MEGACYCLE CHANGE Knob. This knob controls the selection of the proper crystal and tuned circuit in the crystal oscillator subchassis. This is done through 32 positions of switches S401 and S402 as the MEGACYCLE CHANGE knob is turned from end to end through the 10-turn progressive stop. The antenna, rf and variable if band switches are rotated through six positions as the MEGACYCLE CHANGE knob is turned from stop to stop. This motion is intermittent, and occurs at precisely the correct time. Switches S201 through S208 in the rf subchassis are operated with this intermittent motion. This is accomplished through the intermittent gear and overtravel coupler. An intermittent gear turns its mating gear only when one of the few teeth of the driving gear mesh with teeth of the driven gear. The MEGACYCLE CHANGE control also positions (through the differential) the starting point for the slug racks of the first variable if (17.5 to 25 mc) and the antenna and rf coils for the 2- to 4-mc, 4- to 8-mc, 8- to 16-mc, and 16- to 32-mc bands. From this starting point, the KILOCYCLE CHANGE control moves (through the same differential) the slug racks to cover the frequency range of this control.

d. Shorting Adjacent Coils. The rear section of switch S204 short-circuits the secondary winding of the adjacent antenna transformer. This is necessary to prevent interaction with the secondary winding of the antenna transformer that has been selected by the front section of switch S204. The chart below indicates the band, frequency range, secondary winding in use, and the secondary winding shorted by the rear section of S204.

Band switch and position	*Secondary winding in use*	*Secondary winding shorted*
1 (.5-1)	L213	L217
2 (1-2)	L215	L213
3 (2-4)	L217	L215
4 (4-8)	L219	L217
5 (8-16)	L221	L219
6 (16-32)	L223	L221

e. Selection of ANT TRIM Capacitors. Either or both of ANT TRIM capacitors C225A and C225B are used for peaking the tuning of the secondary windings of antenna transformers T201 through T206 (par. 54*d*). The chart below indicates the band, frequency range, the selection of C225A and/or C225B, and the use of parallel or series connection with a fixed capacitor across the selected antenna transformer secondary winding.

Band switch and position (mc)	C225A	C225B	*Connection to fixed capacitor in antenna transformer*
1 (.5-1)	In	In	Parallel
2 (1-2)	In	In	Parallel
3 (2-4)	Out	In	Parallel
4 (4-8)	Out	In	Series
5 (8-16)	In	Out	Parallel
6 (16-32)	In	Out	Series

81. Detailed Mechanical Analysis (fig. 51)

a. General. To facilitate an understanding of the function of the mechanical gearing system and electrical tuning system, the gears in figure 51 have been assigned letter designations, as well as the number of teeth in each gear. The turning ratio between mating gears thus can be calculated. The cams that furnish motion to the slug racks are shown as single units; actually, each slug rack has a roller at both ends and identical cams mounted on each end of the cam shaft. This is done to provide stable and accurate operation.

b. MEGACYCLE CHANGE Control.

(1) As the MEGACYCLE CHANGE control is turned, it is limited to 10 turns by a progressive stop. The mc counter wheels show the frequency band or step selected by the MEGACYCLE CHANGE control. As this control is rotated, the counter wheels are driven through gears (A), (B), (C), (D), (E), (L), (M), (R), (S), and (T).

(2) The MEGACYCLE CHANGE control also operates the six-position rf band switch through gears (A), (B), (C), (D), (E), (F), (G), intermittent gear (H), and gears (J) and (K). The intermittent gear and overtravel coupler provides an intermittent rotary motion so that the switch is turned to only one of its six positions at exactly the right time. The gear (G) rotates continuously as the MEGACYCLE CHANGE knob is turned. However, the gears (J) and (K) are driven only during the part of the rotation of the gear (G) when the teeth of the intermittent gear (H) engage the teeth of the gear (J).

(3) Also operated by the MEGACYCLE CHANGE control is the 32-position crystal oscillator switch. This is accomplished through gears (A), (B), (C), (D), (E), (L), (M), (N), and (P).

(4) The 2- to 4-mc, 4- to 8-mc, 8- to 16-mc, and 16- to 32-mc rf slug racks are moved by both the MEGACYCLE CHANGE and KILOCYCLE CHANGE controls through a differential gear system consisting of gears (NN), (B), (VV), (WW), and (U).

(*a*) The 2- to 4-mc rf slug rack is operated by the MEGACYCLE CHANGE control through gears (A), (B), (U), (V), (W), and (X).

(*b*) The 4- to 8-mc rf slug rack is operated by the MEGACYCLE CHANGE control through gears (A), (B), (U), (V), (W), (X), (Y), and (Z).

(*c*) The 8- to 16-mc rf slug rack is operated by the MEGACYCLE CHANGE control through gears (A), (B), (U), (V), (W), (X), (Y), (Z), (AA), and (BB).

(*d*) The 16- to 32-mc rf slug rack is operated by the MEGACYCLE CHANGE control through gears (A), (B), (U), (V), (W), (X), (Y), (Z), (AA), (BB), (CC), and (DD).

(5) In each of the steps (bands .5-1 mc through 16-32 mc) of frequency coverage it is necessary to have an exact stopping point or reference for the circuit elements controlled by the MEGACYCLE CHANGE control. This is done by the mc change detent. A disk with three equally spaced notches around its edge touches the mc change detent and locks the disk when the mc change detent falls into one of the three notches. This mc change detent is made of spring material, and constantly maintains pressure against the three-notch disk. As the MEGACYCLE CHANGE knob is rotated through each band, the action

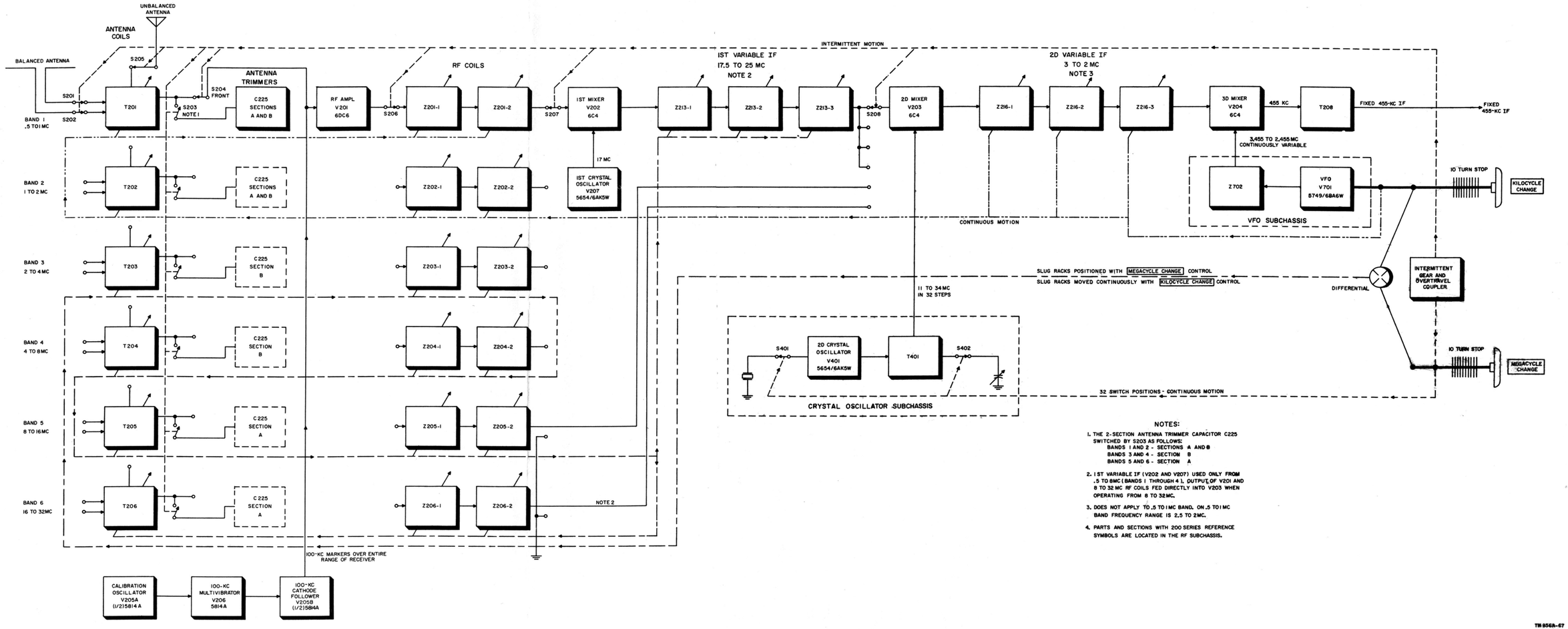

Figure 50. Tuning system, showing relationship of stages, block diagram.

of the mc change detent can be felt. Increasing the hand torque applied to the MEGACYCLE CHANGE knob at this point will cause the three-notch disk to turn past the mc change detent, but it will fall into the adjacent notch when the detent meets the adjacent notch.

(6) The first variable if slug rack (17.5 to 25 mc) is driven by the MEGACYCLE CHANGE knob in the same manner and on the same shaft as the 8- to 16-mc rf slug rack. The gearing is through gears (A), (B), (U), (V), (W), (X), (Y), (Z), (AA), and (BB).

c. KILOCYCLE CHANGE Control.

(1) The KILOCYCLE CHANGE control is limited to 10 turns by a progressive stop. The kc counter wheels show the frequency selected by the KILOCYCLE CHANGE control. To permit overlapping of each band selected, the frequency range of this control is slightly greater than 1 mc. As the KILOCYCLE CHANGE control is rotated, the kilocycle counter wheels are driven through gears (EE), (FF), (GG), (HH), (JJ), and (KK).

(2) The vfo tuning unit is connected directly to the KILOCYCLE CHANGE control through the 10 turn stop and the Oldham coupler. The Oldham coupler is a coupling device for correcting slight misalignment of two shafts. It consists of three disks, the first and third have a tongue, or ridge, running through the center of the inner faces. These two tongues are 90° displaced from each other. The second, or inner disk, has two grooves running through the center of the faces, each likewise displaced 90° from the other. Fitting the three disks together and using the first disk to drive the third disk through the second disk, transfers rotary motion between two shafts which can be slightly out of line with each other. This is possible because the mating tongues and grooves slide slightly to correct the out-of-line condition.

(3) The .5 to 1-mc rf slug rack cam is operated by the KILOCYCLE CHANGE knob through gears (EE), (FF), (LL), (MM), (NN), (PP), (RR), and (SS). The 1- to 2-mc rf slug rack cam is operated through gears (EE), (FF), (LL), (MM), (NN), (PP), (RR), (SS), (TT), and (UU).

(4) The second variable if slug rack (3 to 2 mc) is operated by the KILOCYCLE CHANGE control through the same gears and same shaft as the 1- to 2-mc rf slug rack cam.

(5) The 2- to 4-mc, 4- to 8-mc, 8- to 16-mc, 16- to 32-mc rf slug rack cams are moved by the KILOCYCLE CHANGE control through a differential gear system. These rf slug rack cams are operated through the same gears as in *b*(4)(*a*) through (*d*) above, except for gears (A) and (B). These two gears are replaced by gears (EE), (FF), (LL), (MM), (NN), (VV), and (WW).

d. ZERO ADJ Control. The ZERO ADJ control provides a means of correcting errors in calibration. A locking screw operated by the knob releases the clutch and locks the gear (GG). Tuning over a range of approximately 15 kc is possible with the KILOCYCLE CHANGE control without moving the setting on the three kilocycle counter wheels on the frequency indicator. Operation of the ZERO ADJ knob in a counterclockwise direction engages the clutch and unlocks gear (GG).

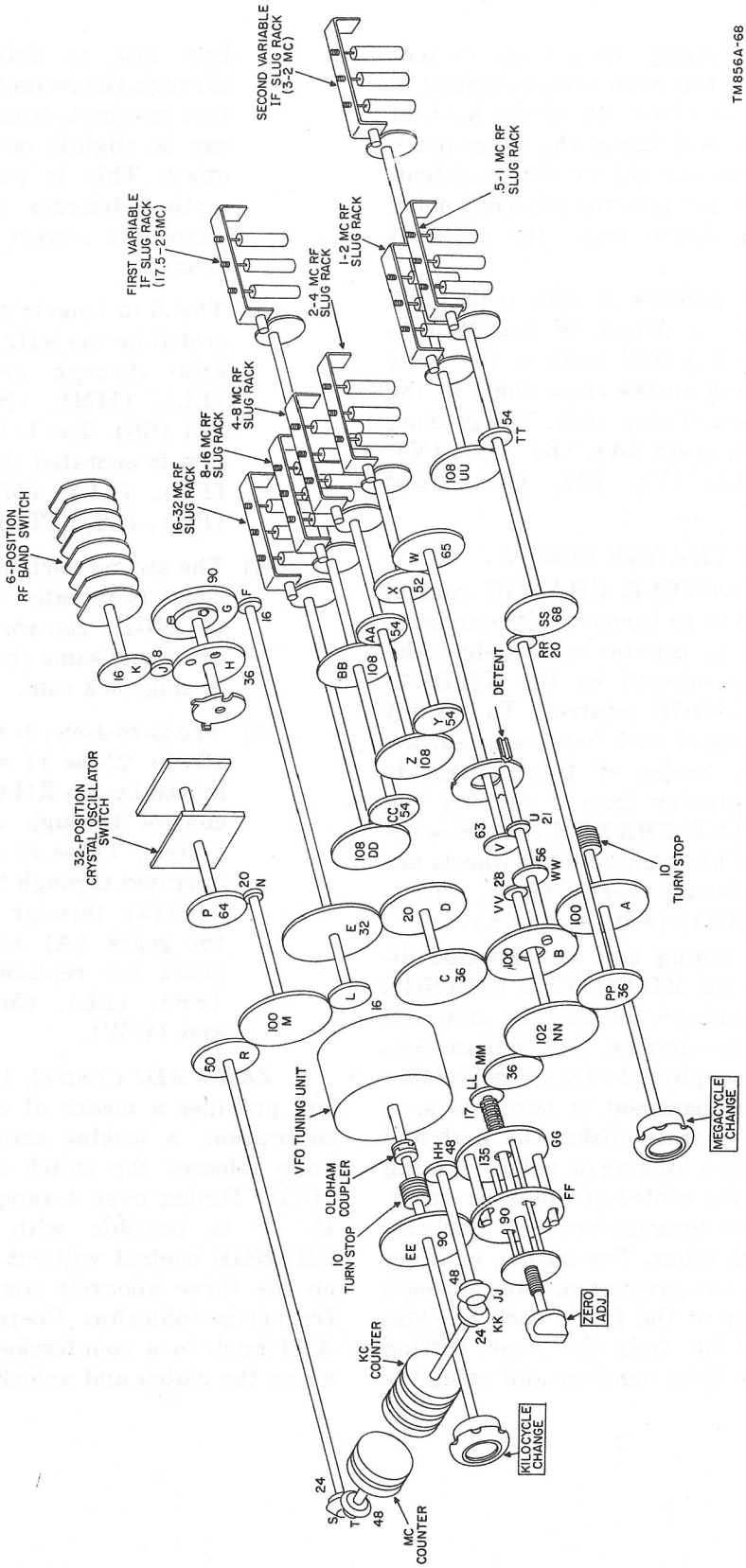

Figure 51. Tuning system, simplified diagram.

CHAPTER 6
FIELD MAINTENANCE

Section I. GENERAL TROUBLE-SHOOTING TECHNIQUES

Warning: When servicing the receiver, avoid contact with the power supply and plate circuits. The high voltages present in these circuits can cause serious injury or death. Connect GND terminal 16 to the same ground as the ac power source before applying power to the receiver.

82. Test Equipment and Tools Required for Trouble Shooting

The test equipment required for trouble shooting Radio Receiver R-390A/URR is listed below. A common usage name is given after each component.

Nomenclature	*Common usage name*
RF Signal Generator set AN/URM-25, or equivalent, with Accessory Kit MK-288/URM	Signal generator
Audio Oscillator TS-382/U, or equivalent	Audio oscillator
Electronic Multimeter TS-505/U, or equivalent	Vtvm
Multimeter TS-352/U, or equivalent	Multimeter
Electron Tube Test Set TV-2/U, or equivalent	Tube tester
Oscilloscope OS-8A/U	Oscilloscope
Electronic Multimeter ME-30A/U	Ac vtvm

83. Trouble-shooting Procedures

a. General. Begin trouble shooting with the steps in paragraphs 42 through 45. The field maintenance instructions supplement the organizational maintenance instructions. When trouble shooting the receiver, begin at the output circuits and work back toward the antenna circuits. The first step in servicing a defective receiver is to sectionalize the fault. Sectionalization consists of tracing the fault to the subchassis responsible for the abnormal operation of the receiver or to the main frame. The second step is to localize the fault. Localization means tracing the fault to the defective circuit on the subchassis or to the parts and wiring of the front panel and main frame. Finally, isolate the defective part by voltage, resistance, and continuity measurements. Some faults, such as burned-out resistors, shorted transformers, and loose connections often can be located by sight, smell, and hearing. The majority of faults, however, must be located by checking tubes, voltage, and resistance.

b. Detailed Procedure. The tests listed below are to be used as a guide in isolating the source of the trouble. To be effective, the procedure should be followed in the order given. The procedure is summarized in (1) through (8) below, which contain references to paragraphs having detailed information for carrying out the tests.

(1) *Initial inspection.* It is often possible to locate troubles within an equipment by inspecting the condition of the wiring and individual parts for visible signs of failure. Because the initial inspection (par. 89) can be quickly and simply carried out and is capable of producing rapid results, it is the

first to be applied in the trouble-shooting procedure. This inspection is also valuable because additional damage to the receiver that might occur through improper servicing methods possibly can be avoided.

(2) *Checking B+ and heater circuits for shorts.* These measurements (par. 90 and 91) prevent further damage to the receiver from possible short circuits. This test gives an indication of the condition of the filter circuit; therefore, its function is more than preventive.

(3) *Operational test.* After it has been determined in the preceding test that a short is not present in the receiver, an operational test (par. 92) is carried out. By using the information gained from observing the symptoms of faulty operation, it is sometimes possible to determine the exact nature of the fault.

(4) *Over-all receiver gain test.* Measurement of the over-all gain (par. 94) is the most important test that can be used to determine over-all receiver performance. This measurement should be the basic test in all maintenance procedures.

(5) *High-frequency oscillators injection voltage test.* The operation of the high-frequency oscillators (par. 93) in the receiver should be checked.

(6) *Trouble-shooting chart.* The trouble-shooting chart (par. 96) presents a systematic method for checking the receiver by eliminating possible sources of trouble until the actual trouble is found.

(7) *Signal substitution.* Signal substitution (par. 98 through 103), when used with the trouble-shooting chart, provides an effective method for methodically tracking down trouble in a receiver.

(8) *Intermittents.* In all these tests, the possibility of intermittents should not be overlooked. If present, this type of trouble may be made to appear by tapping or jarring the subchassis or parts under test. It is possible that the trouble is not in the receiver itself, but in the installation (mounting, antenna, ground, auxiliary equipment, or vehicle), or the trouble may be caused by external conditions. In this event, test the installation, if possible. Intermittent noise conditions may be caused by electron tubes. Tapping each tube gently with a pencil may give an indication of which tube is causing the trouble. Cover the receiver to cause its operating temperature to rise. This sometimes causes intermittent troubles to appear more readily.

84. Trouble-shooting data

Take advantage of the material in this manual. Consult the following trouble-shooting data:

Fig. No.	*Par. No.*	*Description*
15		Radio Receiver R-390A/URR, top deck, tube location.
16		Radio Receiver R-390A/URR, bottom deck, tube location.
52 and 53		Fabrication of test cables.
56 through 74		Illustrations of receiver and subchassis.
		Megacycle change noise test.
		Calibration oscillator test.
	90	Checking B+ circuit for shorts.
	91	Checking filament circuit for shorts.
	94	Over-all receiver gain test.
	95	If subchassis gain test and adjustment.
75 through 81		Voltage and resistance diagrams.
	98 through 103	Signal substitution.
	105	Stage gain charts.
	106	Dc resistances of transformers and coils.
	107	Rf and variable if conversion scheme.
95		Over-all audio response chart.
	110 through 117	Checking special circuit parts.

Fig. No.	Par. No.	Description
	121 through 132	Removals and replacements
100		Resistor color code.
101		Capacitor color code.
102		Filament and oven circuits, schematic diagram.
103		B+ circuits, schematic diagrams.
104		Age distribution, schematic diagram.
105		Main frame wiring diagram.
106		Receiver schematic diagram.

85. Initial Control Settings

Use control settings given below prior to any test or trouble-shooting procedure. Many of the tests that follow repeat some of the settings and others refer back to this paragraph, to stress the importance of using the proper control settings. Observe these control settings, and change them *only when instructions in a particular procedure order different control settings.*

LINE METER .....OFF
LINE GAIN .....O
AGC .....MED
LIMITER .....OFF
AUDIO RESPONSE ....WIDE
BANDWIDTH .....8 KC
BFO PITCH .....O
BREAK IN.....OFF
FUNCTION .....AGC
ANT TRIM .....O, or maximum output
BFO .....OFF
DIAL LOCK .....Unlocked, fully counterclockwise
ZERO ADJ .....Disengaged, fully counterclockwise
LOCAL GAIN .....5, or desired volume
OVENS .....OFF
MEGACYCLE CHANGE 01, or as specified
KILOCYCLE CHANGE .510, or as specified
RF GAIN 10

Section II. TROUBLE SHOOTING RADIO RECEIVER R-390A/URR

86. Bench Testing

a. When testing or trouble shooting the receiver, do not remove a subchassis unless absolutely necessary. The patch cords (fig. 52 and 53) are required for operating the subchassis out of the receiver. When making these items, be sure to make several of the coaxial type (fig. 52), because the rf and if subchassis have more than one coaxial connection.

b. To prepare a subchassis for testing or trouble shooting outside the receiver main frame, follow the instructions given in paragraph 121. *Avoid disturbing the synchronization of the rf gear train assembly with the rf, crystal oscillator, or vfo subchassis.*

87. General Precautions

When servicing a receiver, observe the precautions given in *a* through *f* below.

a. When the receiver is removed from the case, cabinet, or rack for servicing, connect a suitable ground to the main frame and to any subchassis operated outside the main frame before connecting the power cord.

b. Be sure the receiver is disconnected from the power source or is turned off before touching high-voltage circuits or changing connections.

c. After disconnecting auxiliary equipment and before testing the receiver, connect pairs of terminals on the rear panel terminal strips as shown in figure 12.

d. After disconnecting tuning shafts for removal of a subchassis, avoid turning the shafts or tuning controls unless necessary for trouble shooting or adjustment. Careful handling may eliminate the need for mechanical synchronization. Make a note of the positions of the front-panel controls indicated in the removal procedure when removing a subchassis, because a control may be accidentally disturbed during servicing.

e. Careless replacement of parts often makes new faults.

(1) Before unsoldering a part, note the position of the leads. If the part has a number of connections, tag each of its leads, or make a sketch of the proper connections.

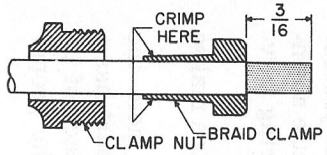

1. INSERT CLAMP NUT OVER CABLE. INSERT BRAID CLAMP OVER CABLE JACKET, PLACE AT DIMENSION SHOWN AND WITH PLIERS CRIMP SLOTTED END INTO CABLE JACKET. DO NOT EXCESSIVELY DISTORT SLOTTED END. CLAMP NUT MUST RIDE FREE OVER CRIMPED PORTION. REMOVE CABLE JACKET BACK TO END OF BRAID CLAMP.

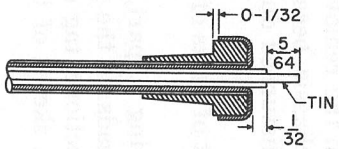

2. COMB OUT BRAID WIRES, FORM BACK OVER BRAID CLAMP AND TRIM TO LENGTH. CUT OFF CABLE DIELECTRIC AS SHOWN. CUT INNER CONDUCTOR TO 5/64 AND TIN.

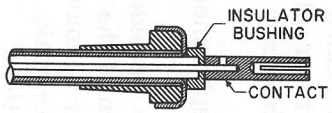

3. INSERT INSULATOR BUSHING OVER CONDUCTOR. TIN END OF CONTACT HOLE AND SWEAT CONTACT TO CONDUCTOR. OUTSIDE SURFACE OF CONTACT MUST BE FREE OF SOLDER.

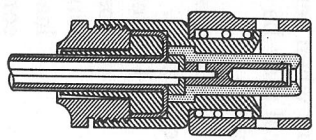

4. INSERT INSULATOR OVER CONTACT. INSERT ASSEMBLY, LESS CLAMP NUT, INTO PLUG BODY AND ROTATE SLIGHTLY TO MAKE SURE BRAID CLAMP IS SEATED. THREAD CLAMP NUT INTO BODY AND TIGHTEN NUT BY HOLDING KNURLED PORTION OF BODY WITH SOFT-NOSED PLIERS.

STRAIGHT PLUG

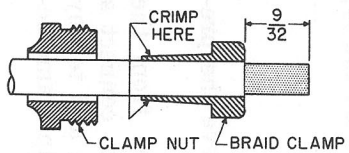

1. INSERT CLAMP NUT OVER CABLE. INSERT BRAID CLAMP OVER CABLE JACKET, PLACE AT DIMENSION SHOWN, AND WITH PLIERS CRIMP SLOTTED END INTO CABLE JACKET. DO NOT EXCESSIVELY DISTORT SLOTTED END. CLAMP NUT MUST RIDE FREE OVER CRIMPED PORTION. REMOVE CABLE JACKET BACK TO END OF BRAID CLAMP.

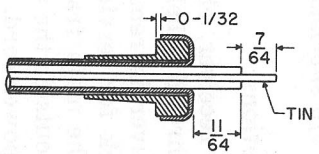

2. COMB OUT BRAID WIRES, FORM BACK OVER BRAID CLAMP AND TRIM TO LENGTH. CUT OFF CABLE DIELECTRIC AS SHOWN. CUT INNER CONDUCTOR TO 7/64 AND TIN.

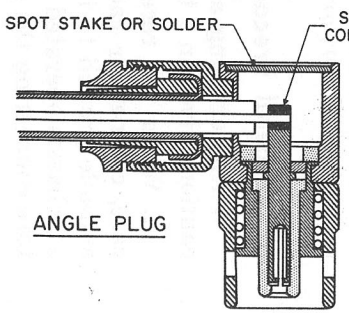

3. INSERT ASSEMBLY, LESS CLAMP NUT, INTO ANGLE PLUG BODY AND ROTATE SLIGHTLY TO MAKE SURE BRAID CLAMP IS SEATED. THREAD CLAMP NUT INTO BODY AND TIGHTEN NUT. WITH CAP REMOVED SOLDER CONDUCTOR IN SLOT OF ANGLE PLUG CONTACT. INSERT CAP IN HOLE AND SPOT SOLDER OR SPOT STAKE TO RETAIN CAP.

ANGLE PLUG

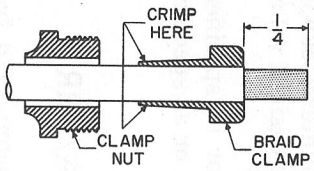

1. INSERT CLAMP NUT OVER CABLE. INSERT BRAID CLAMP OVER CABLE JACKET, PLACE AT DIMENSION SHOWN AND WITH PLIERS CRIMP SLOTTED END INTO CABLE JACKET. DO NOT EXCESSIVELY DISTORT SLOTTED END. CLAMP NUT MUST RIDE FREE OVER CRIMPED PORTION. REMOVE CABLE JACKET BACK TO END OF BRAID CLAMP.

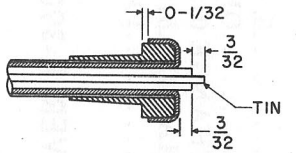

2. COMB OUT BRAID WIRES, FORM BACK OVER BRAID CLAMP AND TRIM TO LENGTH. CUT OFF CABLE DIELECTRIC AS SHOWN. CUT INNER CONDUCTOR TO 3/32 AND TIN.

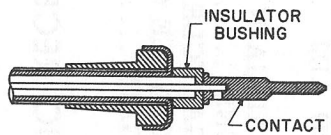

3. INSERT INSULATOR BUSHING OVER CONDUCTOR. TIN END OF CONTACT HOLE AND SWEAT CONTACT TO CONDUCTOR. OUTSIDE SURFACE CONTACT MUST BE FREE OF SOLDER.

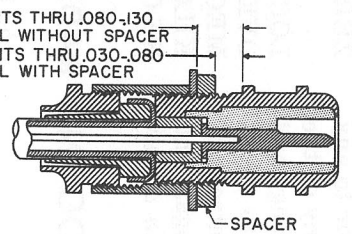

4. INSERT ASSEMBLY, LESS CLAMP NUT, INTO JACK BODY AND ROTATE SLIGHTLY TO MAKE SURE BRAID CLAMP IS SEATED. THREAD CLAMP NUT INTO HEX. COUPLING AND TIGHTEN NUT. WHEN JACK IS PANEL MOUNTED IT IS NECESSARY TO MOUNT FRONT BODY THRU PANEL INSERT SPACER (IF REQUIRED) & LOCK WASHER AND THREAD ON HEX. COUPLING BEFORE INSERTING CABLE ASSEMBLY.

JACK

CABLE TERMINATION

ASSEMBLY INSTRUCTIONS FOR CABLE TERMINATIONS ARE IDENTICAL WITH THOSE GIVEN IN STEPS 1 AND 2 FOR STRAIGHT PLUGS EXCEPT DIMENSIONS FOR CUTTING CABLE DIELECTRIC AND CENTER CONDUCTOR ARE OPTIONAL.

Figure 52. Coaxial test cables.

TM 856A-76

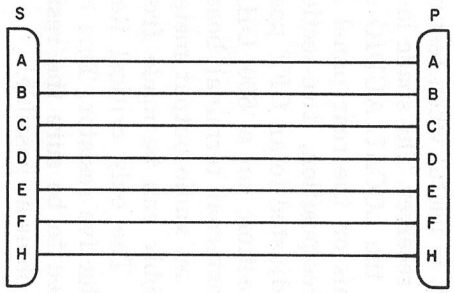

P110-J410
CABLE ASSEMBLY

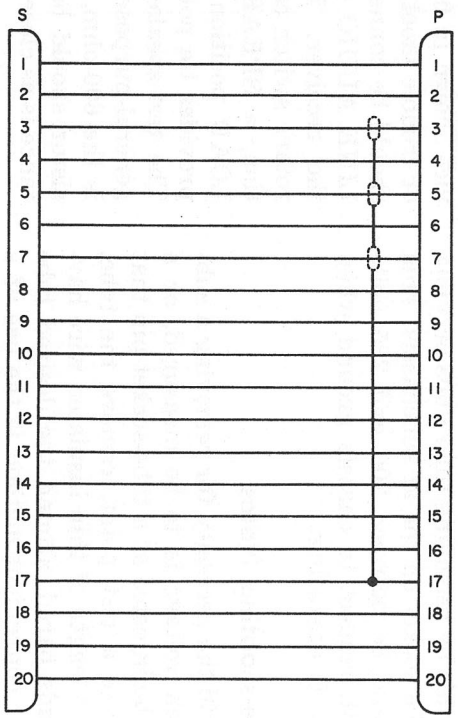

P112-J512
CABLE ASSEMBLY

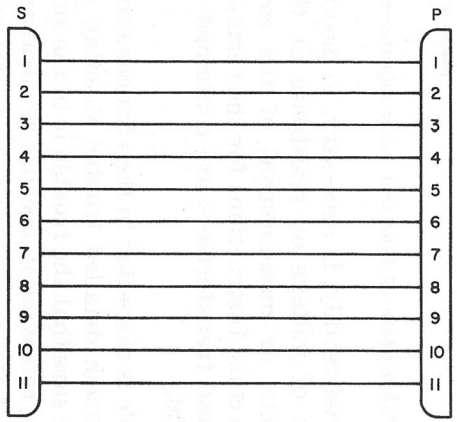

P111-J811 CABLE ASSEMBLY
AND
P119-J619 CABLE ASSEMBLY

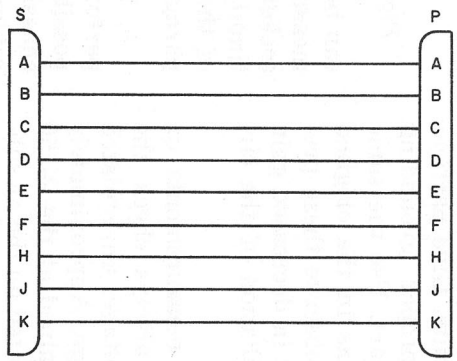

P108-J208 CABLE ASSEMBLY
AND
P109-J709 CABLE ASSEMBLY

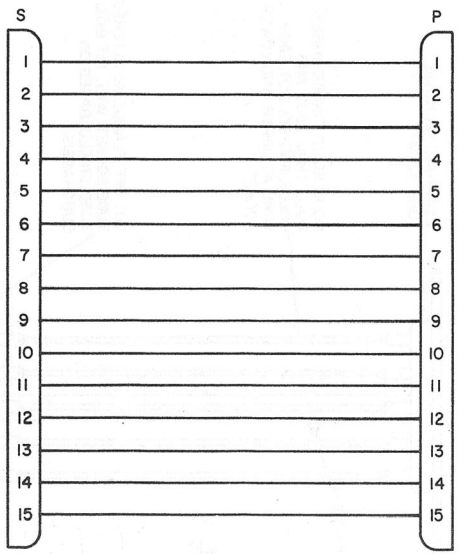

P120-J620
CABLE ASSEMBLY

NOTES:

1. ALL UNSHIELDED WIRES TO BE NO SMALLER THAN 18 GAGE STRANDED WIRE. ALL SHIELDED WIRES TO BE NO SMALLER THAN 18 GAGE SHIELDED.
2. LACE OR TAPE COMPLETED CABLES.
3 MAXIMUM CABLE LENGTH SHALL BE 24 INCHES.
4. CHECK CONTINUITY AFTER COMPLETING FABRICATION.
5. LABEL CABLES FOR IDENTIFICATION.

Figure 53. Multiconductor test cables.

(2) Be careful not to damage leads while pulling or pushing them out of the way.

(3) Do not allow drops of solder to fall into the receiver; they may cause short circuits.

(4) A carelessly soldered connection may create a new fault. It is important to make well-soldered joints; a poorly soldered joint is one of the most difficult faults to find.

(5) When a part is replaced in the rf or if circuit, place it in the exact position of the original part. A part that has the same electrical value but different physical size may cause trouble in high-frequency circuits. Give particular attention to proper grounding when replacing a part. Use the same ground connection as in the original wiring. Failure to observe these precautions may result in decreased gain or, possibly, in oscillation of the circuit.

f. Before taking voltage measurements or performing signal tracing, always check the value of the regulated dc voltage, unregulated dc voltage, and ac line voltage. Approximately +150 volts dc should be obtained at the +150 V dc jack, E607 (fig. 69), located on the af subchassis. This jack is accessible through the main frame of the receiver, at the left side. Check the unregulated dc voltage at pin 6 of XV603 or XV604. Do this by removing tube V603 or V604 from its tube socket on the af subchassis. This voltage should be between 200 and 225 volts positive with respect to chassis ground when the receiver is operating.

88. Trouble-shooting Notes

a. To avoid the necessity for removing a subchassis when voltage is to be measured, or a signal is to be injected at a tube-socket pin that does not have a test point, remove the tube, wrap a short length of thin insulated wire having both ends bared, around the desired tube pin. A more convenient method is the use of a tube adapter with test points. Construction information is shown in figure 54. The rf tuning coils and transformers on the rf subchassis

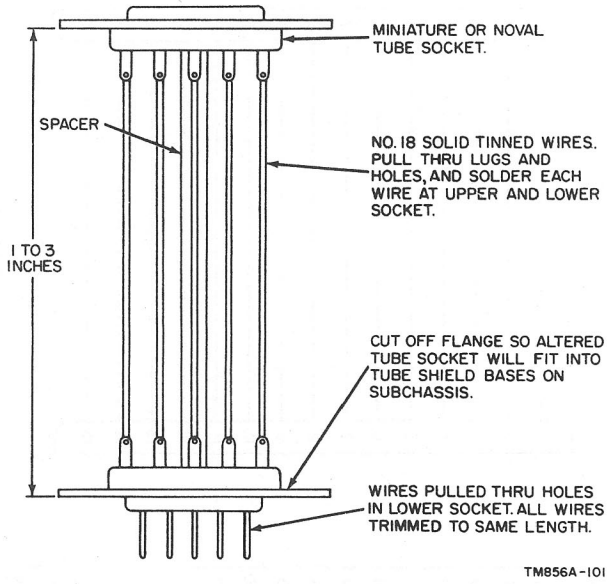

Figure 54. Fabrication of tube test point adapters.

can be removed readily, if necessary, to permit measurement of voltage or resistance at the socket contacts, or measurement of the continuity of the coils. Instructions for the removal of the coils and transformers are contained in paragraph 130.

b. If trouble is suspected in the rf subchassis, perform as much detailed trouble shooting as possible to be sure that the trouble is in the subchassis before removing it, because removal and replacement of the rf subchassis is a time-consuming procedure.

c. A test-speaker assembly, such as the device shown in figure 55, is useful when testing or trouble shooting the receiver. The spade lugs should be connected to the LOCAL AUDIO or LINE AUDIO terminals on the rear panel of the receiver. The three-position, two-section rotary switch can be adjusted to an OFF position, a SPEAKER position, or a 600 OHM LOAD position. The external terminal board provides tie points for an audio output meter. The test-speaker assembly can be made from general-purpose parts. The only critical item is the 600-ohm, noninductive resistor. This resistor should be selected to be sure the resistance is as close to 600 ohms as possible.

d. Receiver noise can be an extremely useful aid in trouble shooting. A properly operating receiver will produce considerable noise when

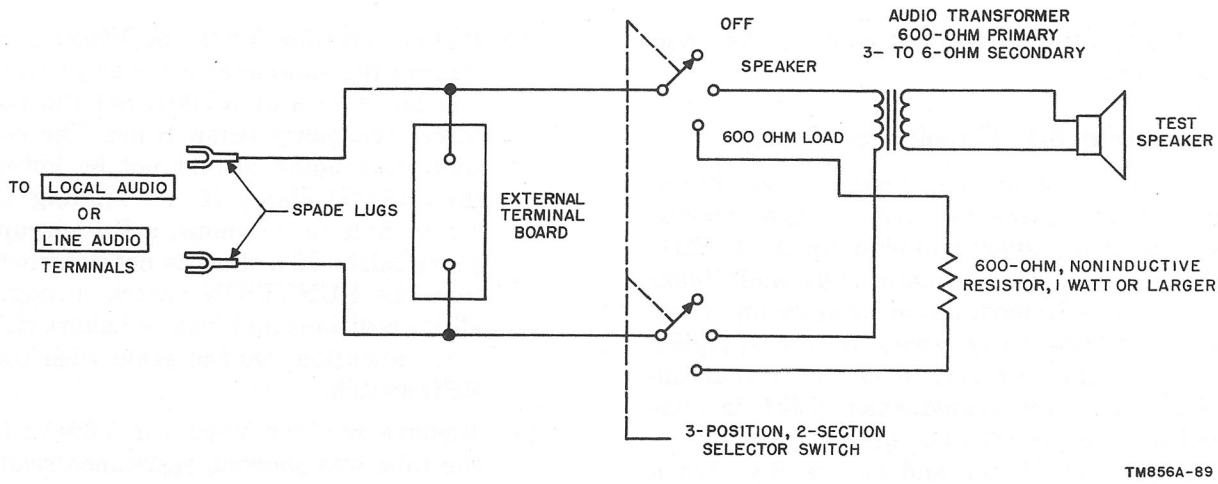

Figure 55. Test-speaker assembly fabrication.

the rf and af gain controls are advanced fully clockwise. Examples of the use of receiver noise for trouble shooting are as follows:

(1) Rf subchassis noise should decrease and then increase as the MEGACYCLE CHANGE knob is turned from band to band (par. 46*d*).

(2) Rf subchassis noise should change as the ANT TRIM control is adjusted and should decrease as the antenna terminals are shorted (par. 46*e*).

(3) If subchassis noise should decrease as the BANDWIDTH control is turned from a wider bandwidth to a narrower bandwidth (par. 46*b*).

(4) Af subchassis noise will decrease as the DIODE LOAD terminals on the rear panel are grounded (par. 46*a*).

e. The CARRIER LEVEL meter and the LINE LEVEL meter on Radio Receiver R-390A/URR are useful instruments for testing and trouble shooting. The CARRIER LEVEL meter measures the relative signal strength of the incoming rf or test signals. Indications on this meter are proportional to those at the AGC terminals on the rear panel of the receiver. The LINE LEVEL meter readings can be translated into audio output or power ratio readings. The LINE METER switch extends the range of the LINE LEVEL meter over a 40-db range.

89. Initial Inspection

When a receiver is brought in from the field for check or repair, remove the top and bottom dust covers, and inspect according to the instructions in *a* through *g* below. Observe the precautions described in paragraph 87.

a. Inspect all cables, plugs, and receptacles. Check to see that all connectors are seated properly. This is important because improperly seated connectors are a frequent cause of abnormal operation in equipment. Repair or replace any connectors or cables that are broken or otherwise defective.

b. Inspect for burned insulation and resistors that show signs of overheating. Look for wax leakage and any discoloration of parts and wires.

c. Inspect for broken connections to tube sockets, plugs, and other apparatus, as well as for defective soldered connections. Examine for bare wires touching the chassis or adjoining wires.

d. Be sure that all tubes are in their correct positions (fig. 15 and 16). Replace or interchange any tubes that are not of the type called for in the illustrations. Replace broken tubes. Inspect for loose tube-socket contacts.

e. Inspect the AC 3 AMP fuse and replace, if necessary, with a fuse of correct rating and type (par. 13*f*). Check carefully for short circuits (par. 90 and 91) whenever a blown fuse is found.

f. Be sure the MEGACYCLE CHANGE and KILOCYCLE CHANGE controls turn freely. Rough operation or binding indicates a damaged tuning system or need for cleaning and lubrication (par. 39*a*(3) and 133).

g. Check all switches and controls for ease of operation.

90. Checking B+ Circuits for Shorts

a. To prevent damage to a receiver sent in for repair, always check the high-voltage circuits for shorts. A B+ short will blow the AC 3 AMP fuse F101, damage rectifiers V801 and V802, cause resistors to burn up, or produce any combination of these three items. Before applying ac power to the receiver, check to see that the primary of power transformer T801 is connected for the correct line voltage (par. 15).

b. Always check for and isolate B+ shorts with an ohmmeter prior to applying ac power. Proceed as follows:

(1) Remove the ac power plug from the source of ac power.

(2) Adjust the front-panel controls as instructed in paragraph 85.

(3) Remove rectifier V801 (or V802) and connect the ohmmeter between ground and pin 3 or 8 of XV801. Set the receiver frequency below 8 mc. The resistance reading should not be lower than 15,000 ohms. If the reading is lower than 15,000 ohms, a B+ circuit short exists. If a short is not detected, turn the FUNCTION switch through all its positions and look for short circuit indication. Do the same with the BFO switch.

(4) Remove rectifier V802 (or V801); if the tube was shorted, resistance reading will increase above 15,000 ohms.

(5) Remove power and control plugs from each of the subchassis in the order listed below and observe the ohmmeter reading each time a plug is disconnected.

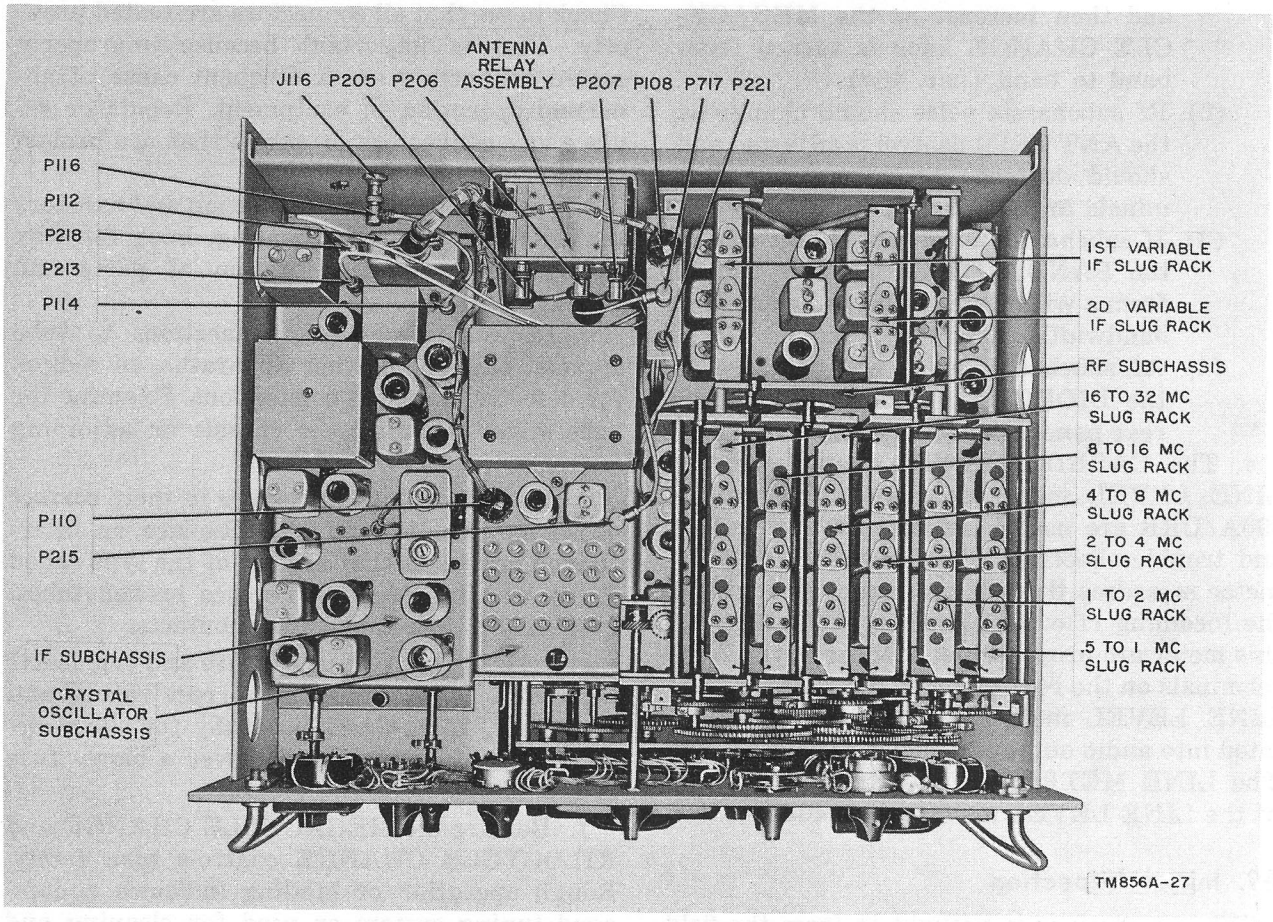

Figure 56. Radio Receiver R-390A/URR, top view.

(*a*) Af subchassis (P119 and P120).
(*b*) If subchassis (P112).
(*c*) Rf subchassis (P108).
(*d*) Vfo subchassis (P109).
(*e*) Crystal-oscillator subchassis (P110).
(*f*) Power-supply subchassis (P111).

(6) After disconnecting each of the plugs [(*a*) through (*f*) above], observe the reading on the ohmmeter. If one of the subchassis contains a B+ short, the ohmmeter reading will suddenly increase when its power plug is disconnected.

(7) If a B+ short is traced to an individual subchassis, remove the subchassis and connect the ohmmeter to the B+ line for that subchassis. The charts given in paragraph 119 give the dc resistance readings at the power connectors of each subchassis. These measurements are made with the subchassis removed from the main frame. Remove each tube, one at a time, while observing the ohmmeter. This will detect a shorted tube. If tubes are not the cause of the trouble, check each subchassis bypass capacitor for a short circuit.

(8) If the short circuit persists after all the subchassis are disconnected, the short circuit is in the main frame wiring. If this is the case, continue tracing the B+ short with all the subchassis plugs disconnected. Check the ohmmeter readings from the chassis ground to each of the following connections: P119-2, P119-3, P119-4 and P119-5. Use the lowest ohmmeter scale that will give a usable reading. Trace through the various B+ lines with the aid of the B+ distribution diagram (fig. 103).

c. In some cases, B+ shorts will be intermittent or will appear only when B+ voltage is present. If this is the case, disconnect all power connectors except power-supply subchassis connector P111 and af subchassis connector P119. Apply power by connecting 115 volts ac (or 230 volts ac if power transformer T801 primary is connected for 230 volts ac) and setting the FUNCTION switch to AGC. Remove tube V603 or V604 from the af subchassis and connect the dc voltmeter to pin 5 or 6 of either of the tube

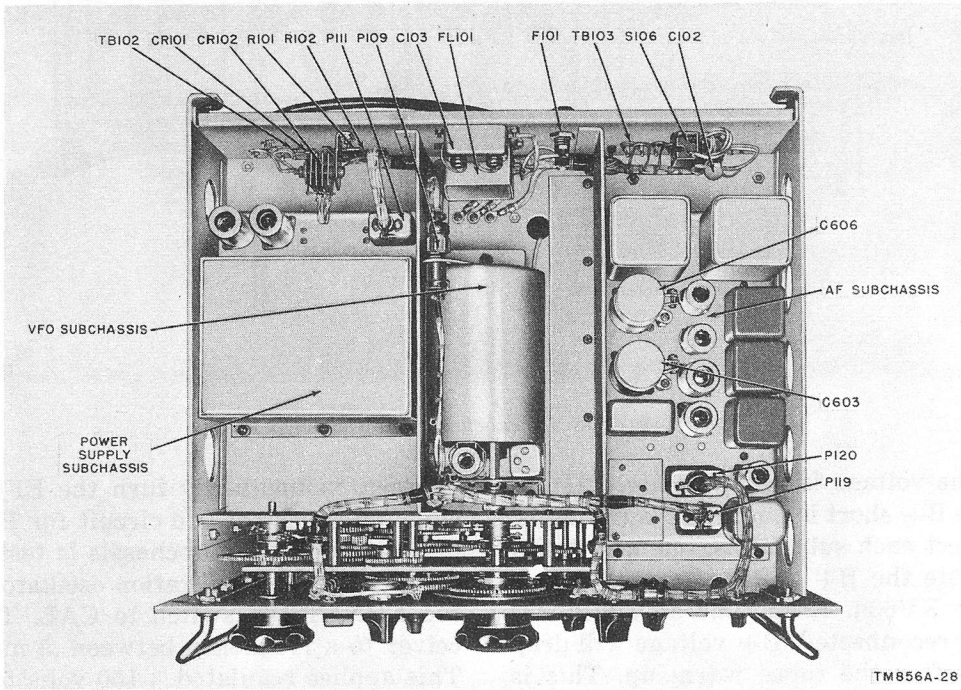

Figure 57. Radio Receiver R-390A/URR, bottom view.

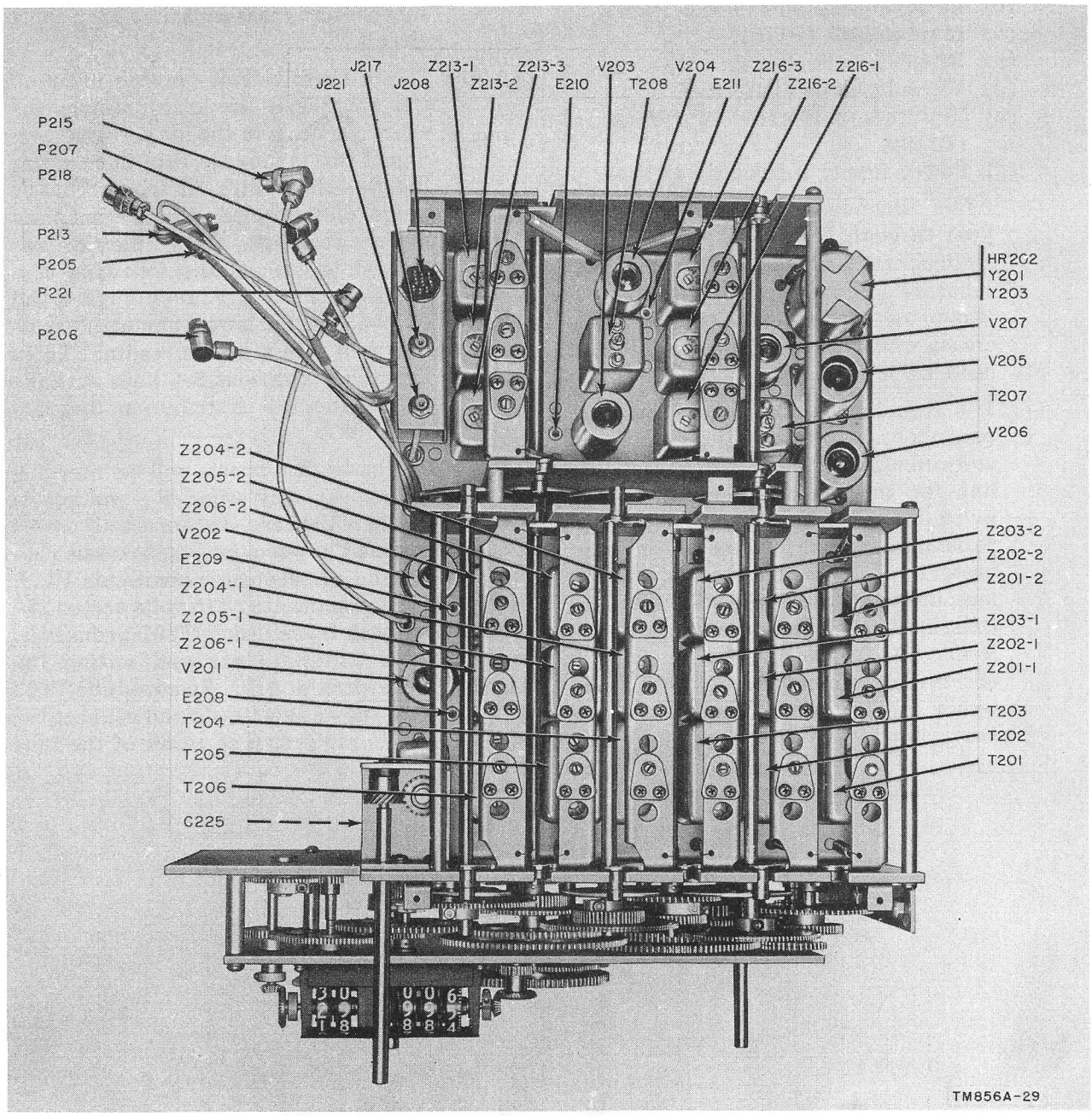

Figure 58. Rf subchassis, top view.

sockets. If the voltage is approximately 215 to 240 volts, the B+ short is not in this subchassis.

d. Reconnect each subchassis, one at a time; each time, note the B+ voltage at pins 5 or 6 of XV603 or XV604. Each time an additional subchassis is reconnected, B+ voltage will drop a few volts after the tubes warm up. This is normal, because of the additional load.

e. When the if subchassis is tested in this manner, momentarily turn the BFO switch to ON, and check the bfo circuit for B+ shorts.

f. When the rf subchassis is tested, momentarily check the calibration oscillator by setting the FUNCTION switch to CAL. Tune the receiver to a frequency between .5 mc and 8 mc. This applies regulated +150 volts to the screen grid of V207.

g. When reconnecting the crystal-oscillator

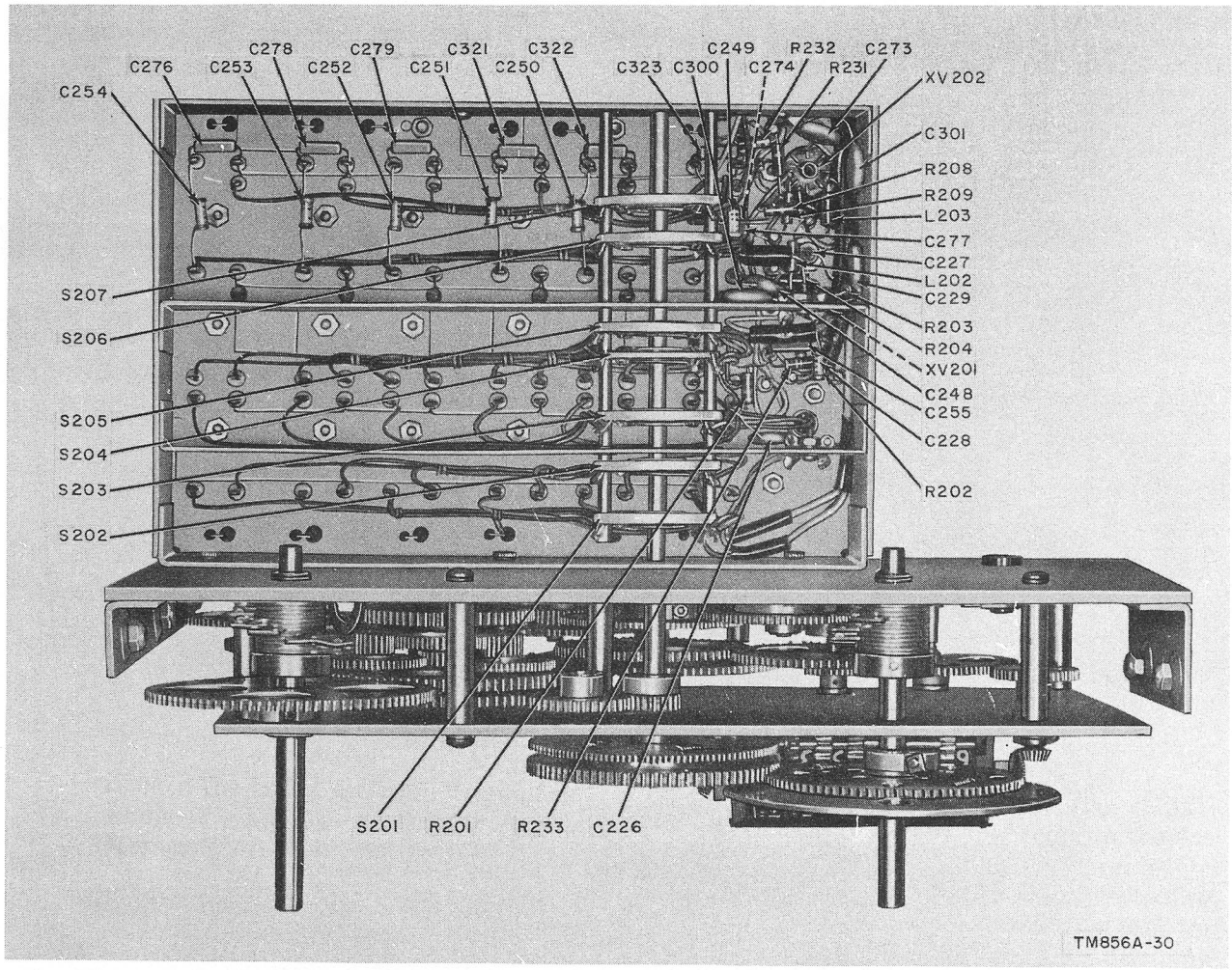

Figure 59. Rf subchassis, bottom view, front section.

subchassis and the vfo subchassis, check the regulated voltage at the +150V test point E607 on the af subchassis. This point can be reached through a hole at the left side of the receiver. Also check for approximately 205 to 225 volts on pins 5 and 6 of XV603 or XV604 when all the subchassis are reconnected.

91. Checking Heater and Oven Circuits for Opens and Shorts

a. Open Circuits.

(1) An open circuit in the filament and/or oven circuits will not cause damage to the receiver, but will render the receiver, or some of its functions, inoperative. All tube heaters are connected in parallel with the ac 6.3-volt filament winding of power transformer T801 with the exception of V401, V701, V801, and V802. The tube heaters of V401 and V701 are connected in series with current-regulator tube RT510, which is located on the if subchassis. A tube that does not light either has an open heater or the circuit carrying the heater power is open. A tube with an open heater is easily detected by substitution by a tube known to be good.

(2) If tubes V401 and V701 do not light, the trouble is with either tube, current-regulator tube RT510, or in the wiring of the series circuit. If rectifiers V801 and V802 do not light, the trouble

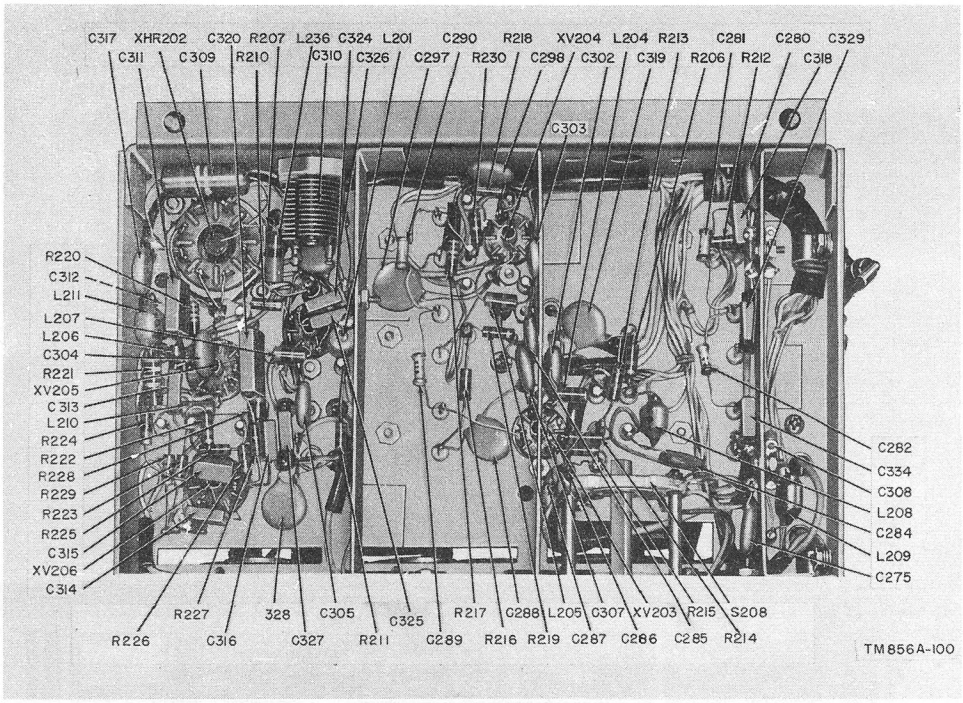

Figure 60. Rf subchassis, bottom view, rear section.

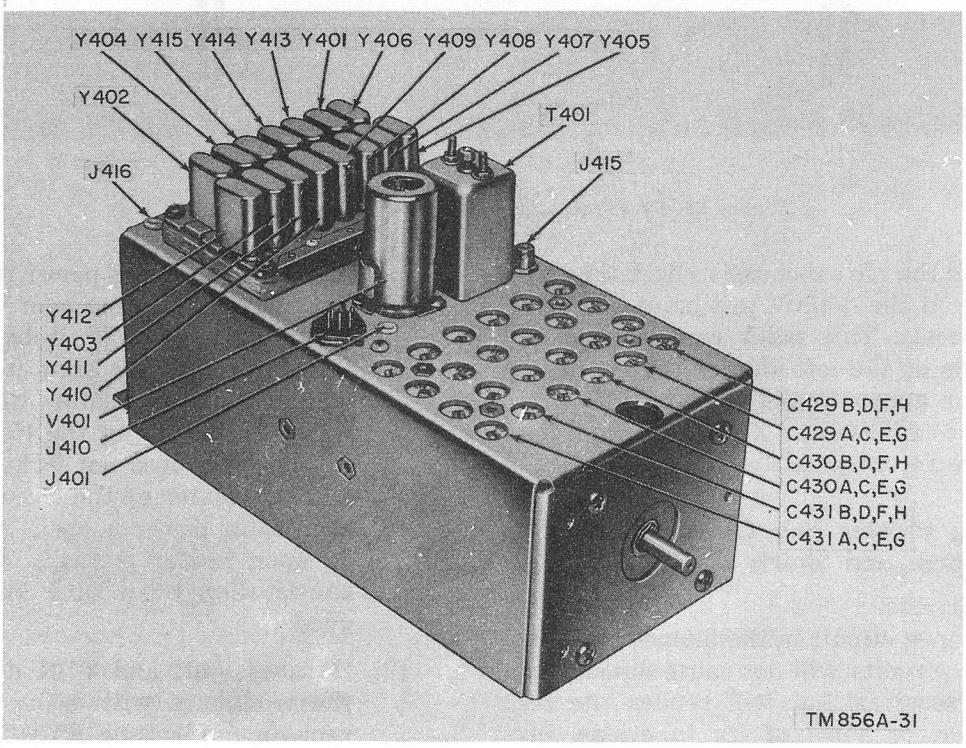

Figure 61. Crystal-oscillator subchassis, top view.

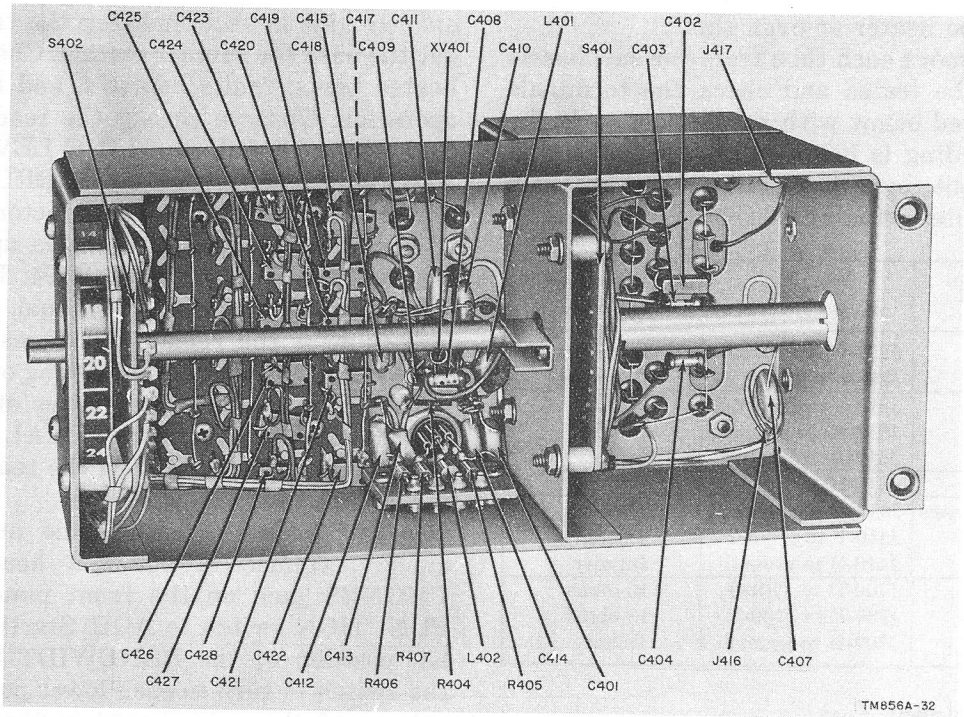

Figure 62. Crystal-oscillator subchassis, bottom view.

is with the tubes, an open 25.2-volt ac filament winding on power transformer T801, or in the wiring.

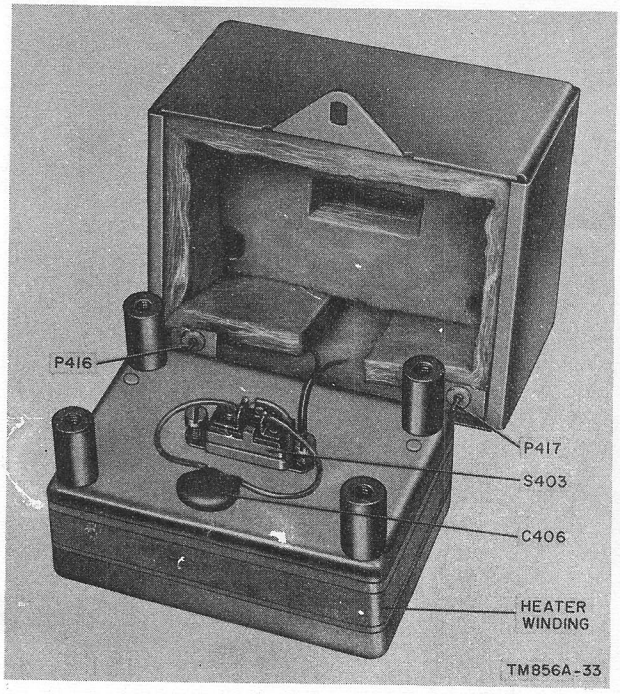

Figure 63. Crystal-oscillator subchassis, internal view of crystal oven.

(3) Crystal oven HR202 on the rf subchassis is always connected to the 6.3-volt ac line. If it does not operate, the thermostat switch, the heater winding, or the wiring to it is defective. For the vfo oven HR701, or crystal-oscillator oven HR401 to operate, OVENS switch S106 must be in the ON position. Trouble in these circuits must be detected by checking the individual parts in each one. Use figure 102 when checking these circuits.

b. Shorted Circuits.

(1) Short circuits in the tube heater and/or oven circuits usually blow the AC 3 AMP fuse on the rear panel on the receiver. Disconnect all power plugs except P111 from the power-supply subchassis and apply ac power to the receiver. Set the FUNCTION switch to STAND BY. If tubes V801 and V802 in the power-supply subchassis light and fuse F101 does not blow, the trouble is in one of the other subchassis. If the fuse blows, the trouble is in the power-supply subchassis or main frame wiring. Follow the procedure in (2) below for locating the

tube heater or oven short.

(2) Remove each tube from the subchassis to be tested and check the terminals listed below with an ohmmeter. If the reading is below that specified, a filament bypass capacitor or an oven heater winding is short-circuited.

Subchassis	*Points of ohmmeter check*	*Resistance not less than*
Rf subchassis	J208-B to ground	Infinity
	J208-F to ground	100 ohms
If subchassis	J512-8 to ground	Infinity
	J512-19 to ground	Infinity
	J512-20 to ground	Infinity
Af subchassis	J619-10	Infinity
Xtal osc subchassis	J410-E to ground	11 ohms
	J410-F to ground	11 ohms
	J410-B to ground	Infinity
Vfo subchassis	J709-D to J709-J	13 ohms
	J709-E to J709-K	13 ohms
	J709-H to ground	Infinity

92. Operational Test

a. Operate the equipment as described in the equipment performance check list (par. 50). This check list is important because it frequently aids in sectionalizing the trouble without the need for further testing. Check for overheated parts, faulty controls, and intermittent operation. Observe closely the readings of the CARRIER LEVEL and LINE LEVEL meters. A normal reading on the CARRIER LEVEL meter usually indicates satisfactory operation of the agc circuit and all stages up to and including fourth if amplifier V504. If the LINE LEVEL meter reading is normal, satisfactory operation of the remaining stages, except for the local audio channel, consisting of V602A and V603, is indicated. These latter stages can be checked by listening to the LOCAL AUDIO output at terminals 6 and 7 on the rear panel with a 600-ohm headset or speaker.

b. To check the local audio and if stages quickly, connect a 600-ohm headset to the PHONES jack on the front panel. Turn the FUNCTION switch to AGC. Starting at the 16 KC position of the BANDWIDTH switch, set the switch in turn to each lower position. If the volume of the noise heard in the headset decreases noticeably with each lower setting, the if and local audio stages are operating. This test does not necessarily indicate normal operation.

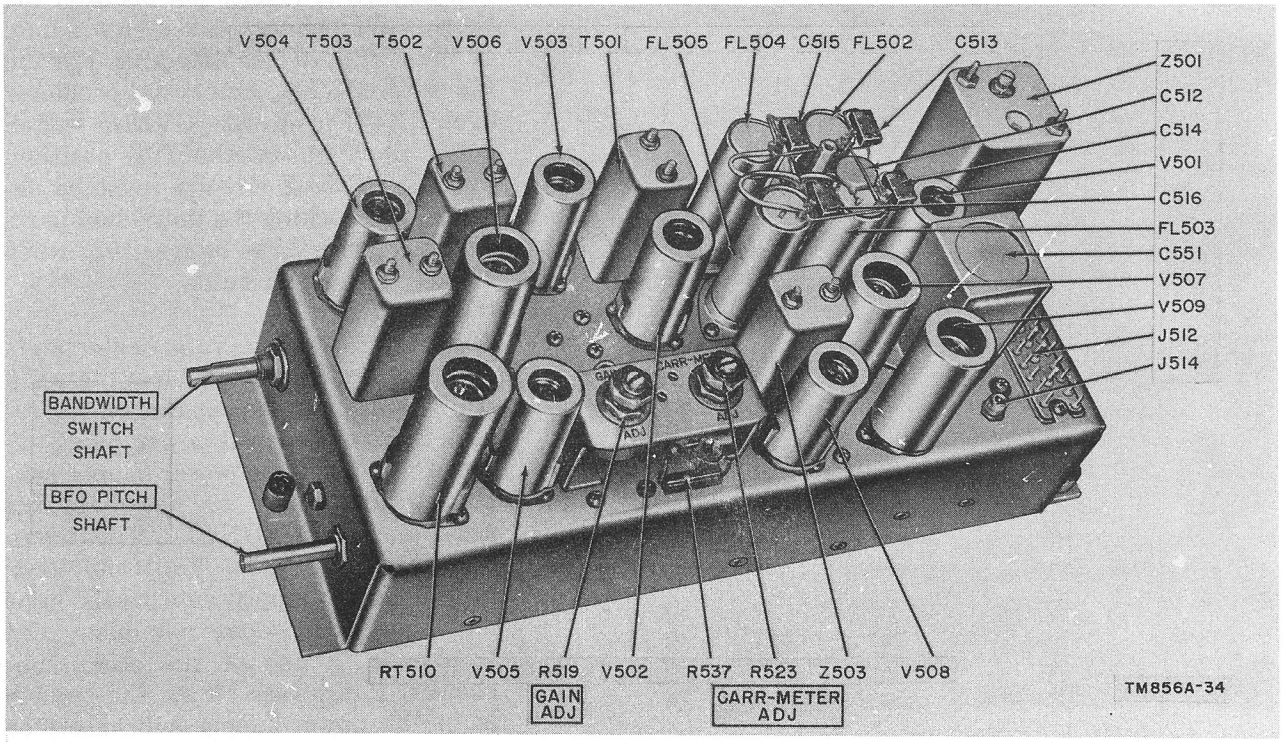

Figure 64. If subchassis, top view.

c. The calibration-oscillator signal can be used as a convenient means of quickly localizing trouble in the receiver. Typical methods are described in (1) and (2) below.

(1) To check the contacts of the rf band switches (S201 through S208, fig. 59) and crystal-oscillator band switches (S401 and S402, fig. 62), connect a 600-ohm headset to the PHONES jack on front panel. Set the FUNCTION switch to CAL. Set the KILOCYCLE CHANGE control to any 100-kc position, and turn the BFO switch to ON. Starting with the lowest detent position of the MEGACYCLE CHANGE control, turn the control to each detent position in succession. Adjust the BFO PITCH control as necessary to obtain a signal in the headset. If no audible signal is heard in a detent position, trouble with contacts of the rf band switch or crystal-oscillator band switch is indicated.

(2) Check the LINE LEVEL meter, LINE METER switch, and LINE GAIN control as follows: Connect a headset to the PHONES jack on the front panel and adjust the KILOCYCLE CHANGE control for an even 100-kc reading on the dial. Set the FUNCTION switch to CAL and turn the BFO switch to ON; an audible tone should be heard in the headset. Set the LINE METER switch to —10 and adjust the LINE GAIN control so that the LINE LEVEL meter reads 0 vu (upper

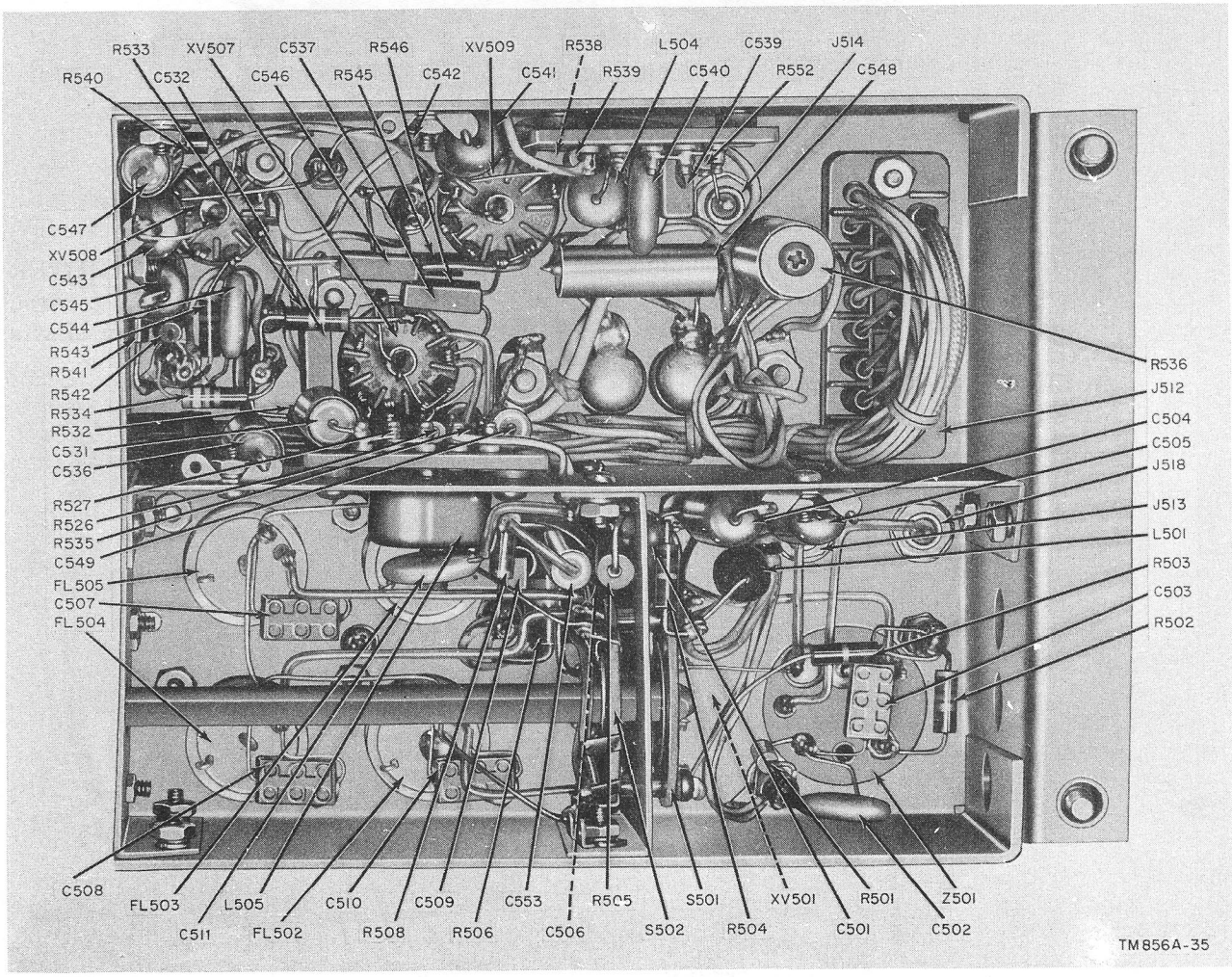

Figure 65. If subchassis, bottom view, rear section.

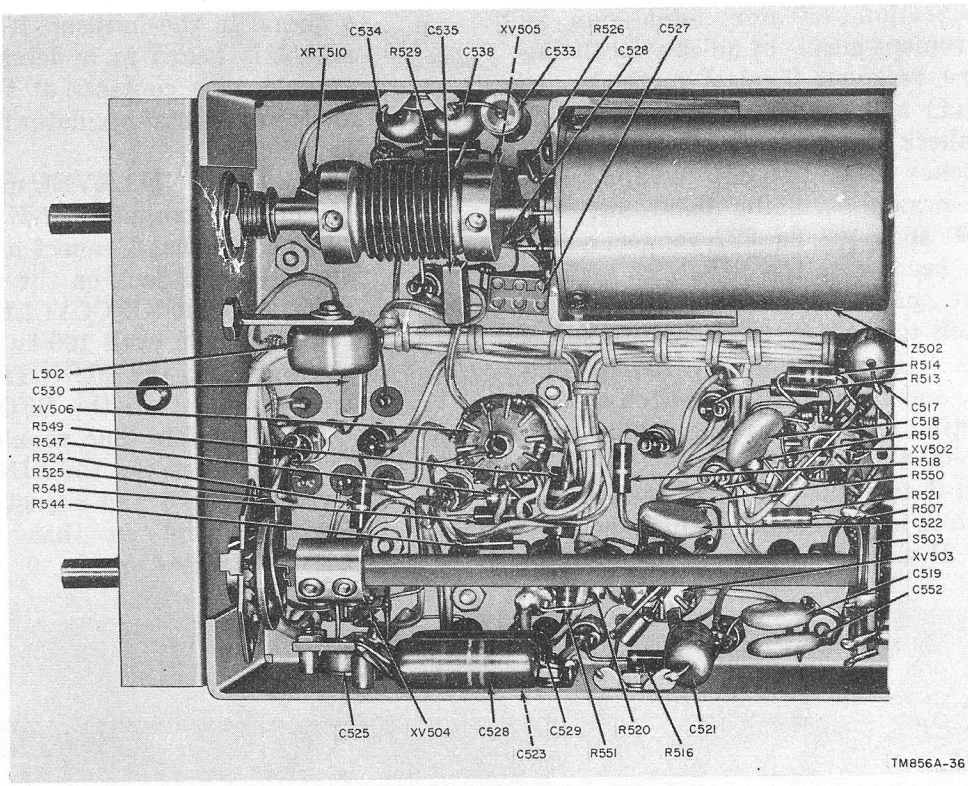

Figure 66. If subchassis, bottom view, front section.

scale). Turn the LINE METER switch to 0. Reading on LINE LEVEL meter should drop to —10 vu. Readjust the LINE GAIN control for a 0-vu reading on LINE LEVEL meter. Turn the LINE METER switch to +10. The LINE LEVEL meter reading should drop to —10 vu. If indications described above are not obtained, check the LINE LEVEL meter and the 10-db pads on TB101 (fig. 74), the LINE METER switch, and the LINE GAIN control.

d. The synchronization of the tuning shafts can be quickly checked as follows:

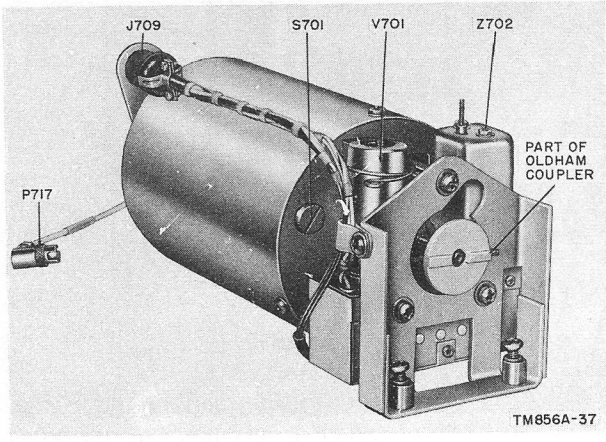

Figure 67. Vfo subchassis, top view.

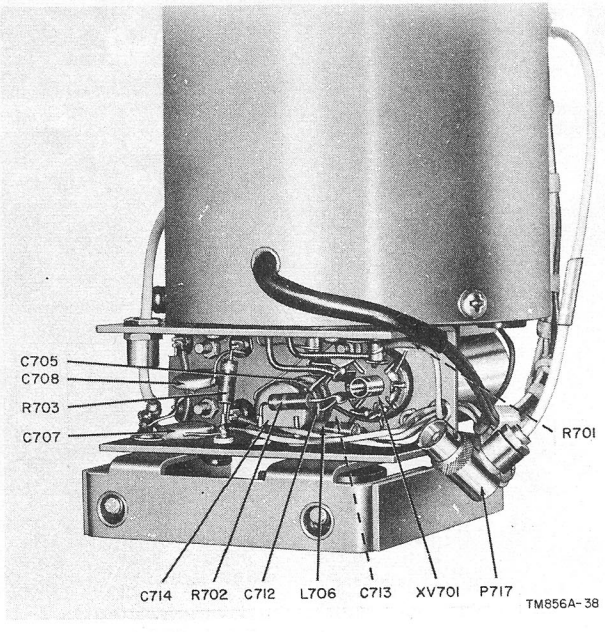

Figure 68. Vfo subchassis, bottom view.

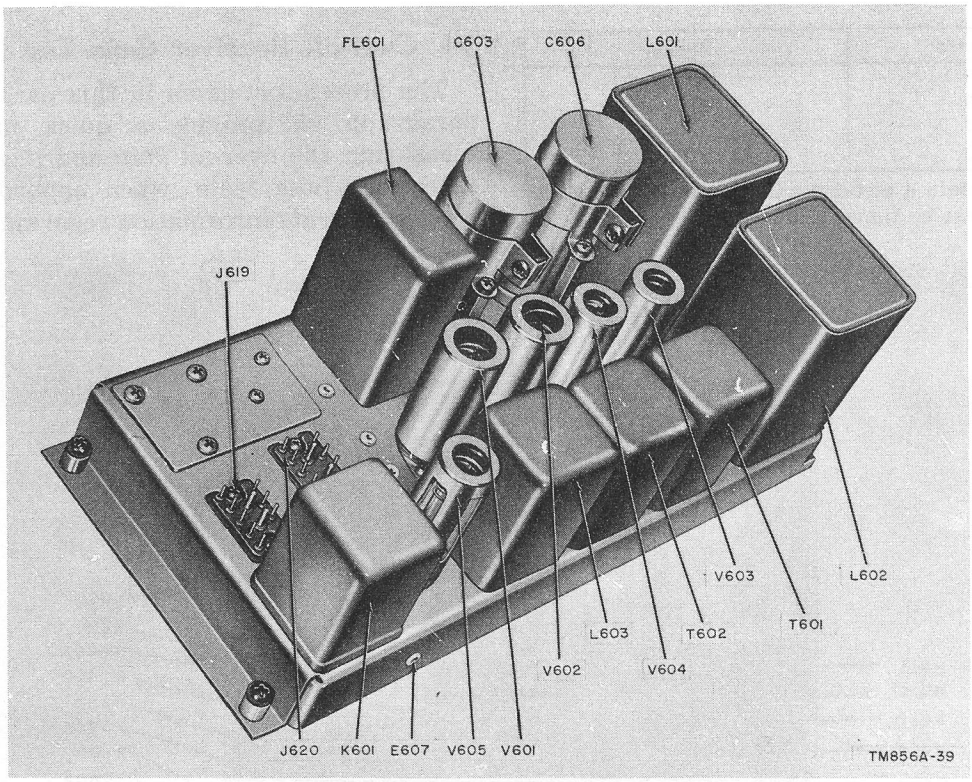

Figure 69. Af subchassis, top view.

(1) Set the frequency-indicator reading so that the first two digits are zeros and the last three digits read an even 100 kc or a multiple thereof between 500 and 900.
(2) Set the FUNCTION switch to CAL.
(3) Advance the RF GAIN control until a reading is obtained on the CARRIER LEVEL meter.
(4) Raise the .5- to 1-mc slug rack (fig. 56) slightly with the hand; the CARRIER LEVEL meter reading should decrease.
(5) Press down lightly on the .5- to 1-mc slug rack (fig. 56) slightly with the hand; the meter reading should decrease. If the reading increases when the slug rack is either raised or depressed, the camshaft is out of synchronization or electrical alignment is required.

Caution: To prevent damage, do not depress the slug rack too vigorously.

(6) Repeat the procedures described in (1) through (5) above for each slug rack (fig. 56), setting the megacycle numbers on the frequency-indicator dial at a reading within the band covered by the slug rack being checked.

e. If an increase in CARRIER LEVEL meter reading is obtained, check mechanical and electrical alignment (par. 138 through 144).

93. High-frequency Oscillator Injection Voltage Tests

A simple check to determine whether the conversion oscillators (V207, V401, and V701) are oscillating can be made as follows:

a. Turn the FUNCTION switch to STAND BY. This removes B+ from all tubes except the conversion oscillators. The cathodes and control grids of the mixers act as rectifiers of the oscillator voltage at test points E209, E210, and E211 (fig. 58). The voltage at test point E402 (fig. 58) is the rectified grid leak bias at the control grid of V401.

b. Check the dc voltage at test points E209, E210, and E211 with a vtvm. The voltages should be as follows:

Test point	*Voltage*
E209	−6.8 (approx.)
E210	−3.5 to −8
E211	−2.8 to −4.3
E402	−4 to −11

Note. To obtain a meter reading at test point E209, the receiver must be tuned below 8 mc.

94. Over-all Receiver Gain Test

The procedures given in this paragraph and paragraph 95, provide a quick method for measuring the over-all gain and if gain of the receiver. These tests, when applied properly, render accurate information regarding the over-

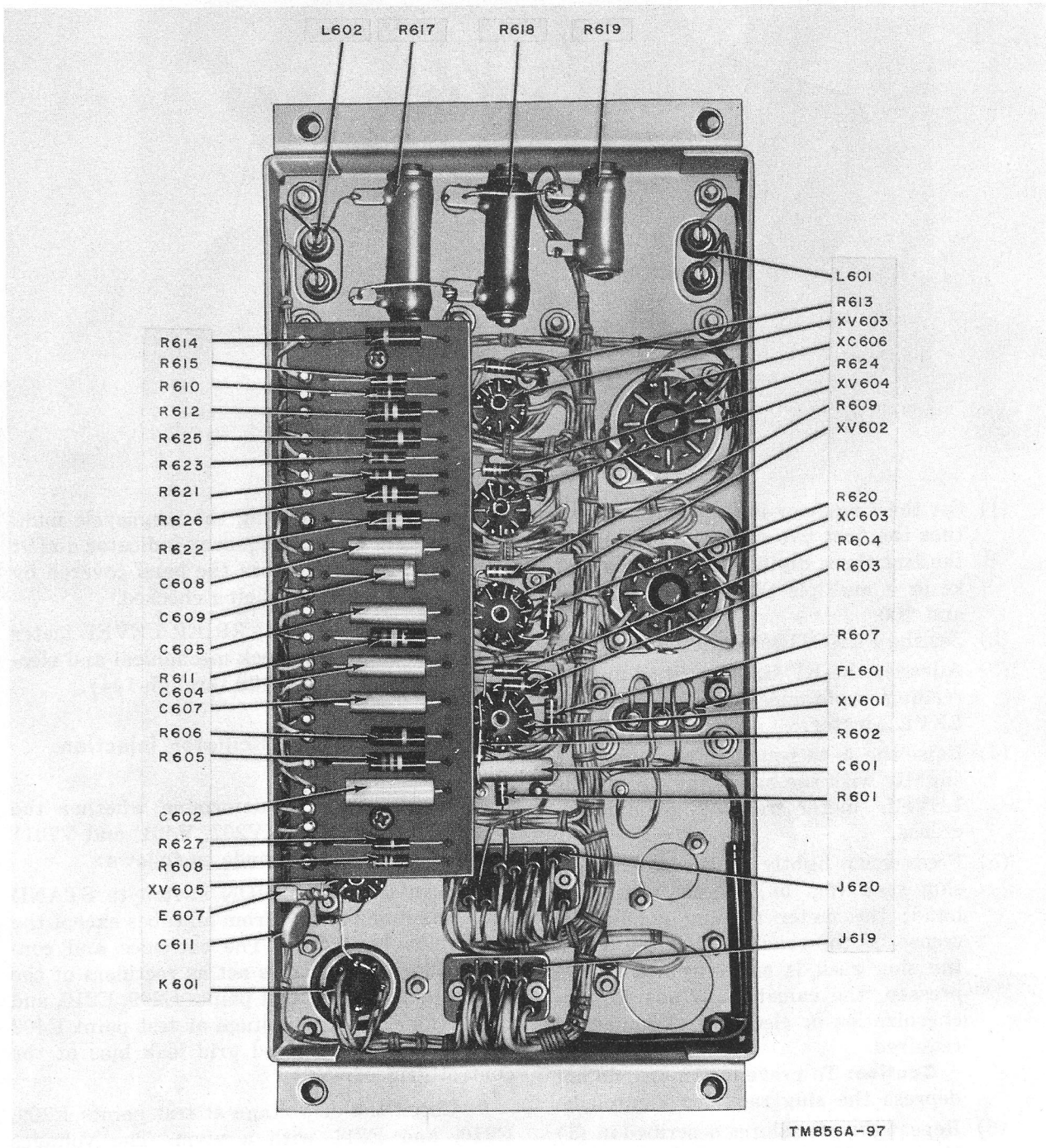

Figure 70. Af subchassis, bottom view.

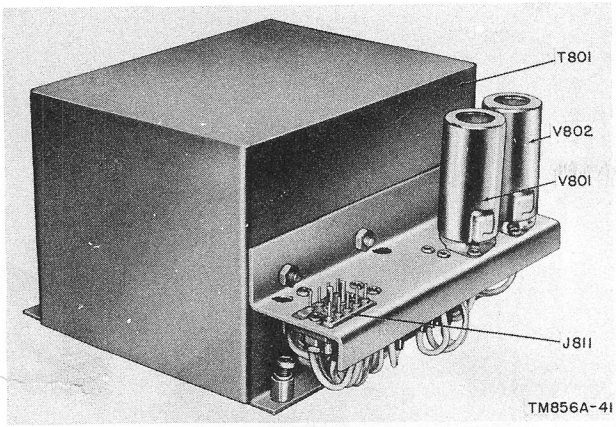

Figure 71. Power-supply subchassis, top view.

all performance of the receiver. Correct use of these tests and procedures will eliminate the possibility of discarding tubes, which still meet tube tester emission tests, but are not quite as good as new tubes. These instructions also outline the method for adjusting GAIN ADJ control R519 on the if subchassis.

a. Set the receiver controls as instructed in paragraph 85, except set the FUNCTION switch to MGC.

b. Connect the vtvm between the DIODE LOAD terminal 14, and ground.

c. Connect the signal generator through Electrical Dummy Load DA-121/U, or equivalent, to the BALANCED ANTENNA connector on the rear panel of the receiver.

d. Tune the receiver and the signal generator to the same frequency.

e. Adjust the signal generator attenuator to

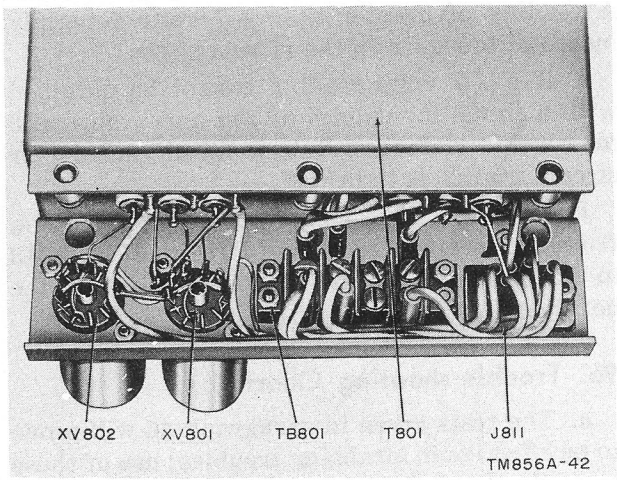

Figure 72. Power-supply subchassis, bottom view.

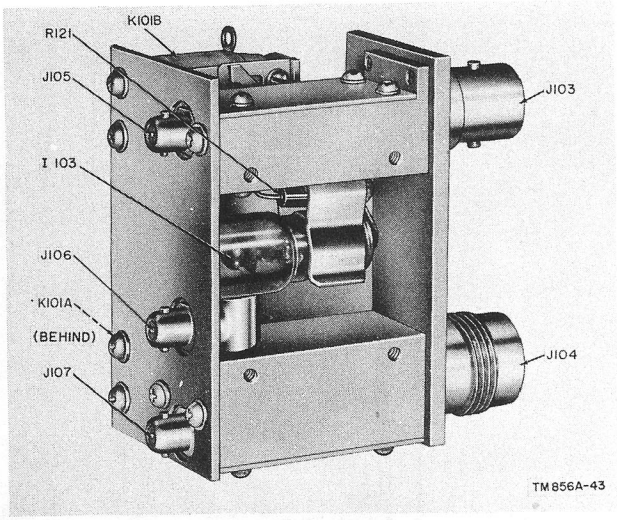

Figure 73. Antenna relay assembly, internal view.

obtain a diode load voltage reading on the vtvm of —7 volts.

f. If the attenuator setting on the signal generator is between 1 and 4 microvolts, the over-all gain of the receiver is satisfactory. If the over-all gain of the receiver is below (or above) this limit, proceed with the instructions in paragraph 95.

g. To make this test successfully, use an accurately calibrated signal generator. If an accurately calibrated signal generator is not available, compare the input signal required to produce a —7-volt reading at the DIODE LOAD terminal of the receiver under test with another similar receiver known to be in good condition.

h. Each time this test is made, record the amplitude of the input voltage required to produce —7 volts between the DIODE LOAD terminal and ground. If the results of this test show that more than twice the input voltage is required compared to the last recorded input voltage, make the if-gain test according to the instructions in paragraph 95.

95. If Subchassis Gain Test and Adjustment

Note. This test and adjustment procedure should be done each time tubes are replaced in the if subchassis.

If the over-all gain of the receiver is not sufficient to yield a diode load voltage of — 7 volts when the input is between 1 and 4 microvolts, check and adjust the if subchassis gain as follows:

a. Disconnect plugs P213 and P218 from jacks J513 and J518 on the if subchassis (fig. 56).

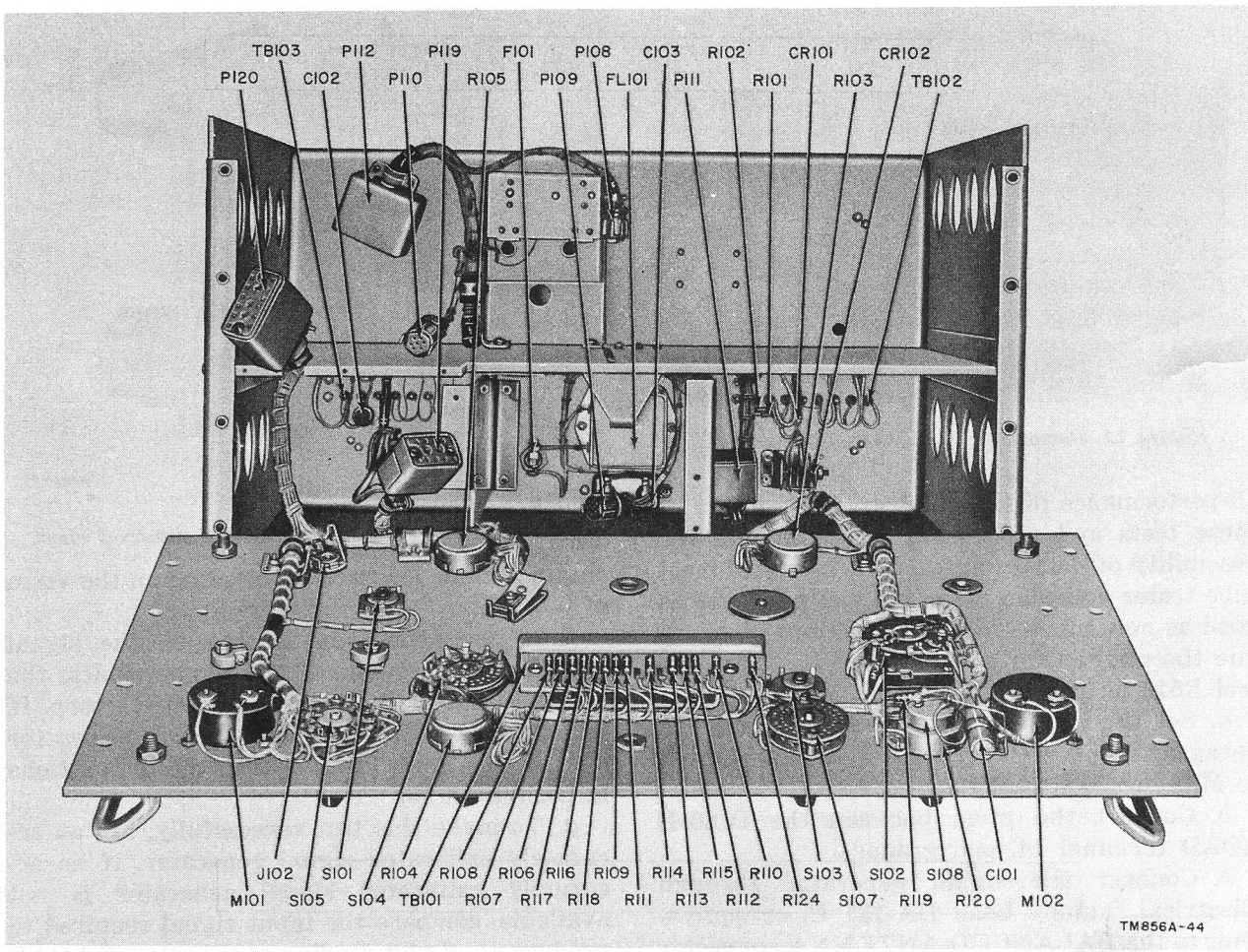

Figure 74. Radio Receiver R-390A/URR, front panel and interior of main frame.

b. Connect the signal generator through Impedance Adapter MX-1487 to the IF OUTPUT receptacle. Disconnect P114 from J514, and connect it to J513.

c. Connect the vtvm between the DIODE LOAD terminal 14 and ground.

d. Set the receiver controls as instructed in paragraph 85, except set the FUNCTION switch to MGC. Be sure the RF GAIN control is fully clockwise.

e. Turn the signal generator modulation off.

f. Tune the signal generator to exactly 455 kc, by peaking the response with the BANDWIDTH control set at .1 KC.

g. Adjust the signal generator attenuator for an output of 150 microvolts, and set the BANDWIDTH control to 8 KC.

h. If the reading on the vtvm is less than —7 volts, loosen the hexagonal lock nut and adjust GAIN ADJ control R519 located on the if subchassis (fig. 64) to obtain a reading of —7 volts. A reading of greater than —7 volts generally indicates low gain in the rf subchassis.

i. If a —7 volts reading cannot be obtained with a signal input level of 150 microvolts ±50 microvolts, defective tubes, misalignment, or circuit trouble is indicated.

j. Disconnect the signal generator and vtvm from the receiver, reconnect P114 to J514, P213 to J513, and P218 to J518, and tighten the hexagonal lock nut on R519.

96. Trouble-shooting Chart

a. The tests given in paragraph 46 will prove to be effective in localizing troubles; use of these tests should be the first step in trouble shooting.

b. The following chart is supplied as a further

aid in locating trouble in the receiver. This chart lists the symptoms that the repairman observes, either visually or audibly, while making simple tests. The chart also indicates how to localize trouble quickly to the audio, if, or rf stage that is defective. The signal substitution tests outlined in paragraphs 98 through 103 can then be used to supplement this procedure as an aid in locating the defective stage. Once the trouble has been localized to a stage or circuit, a tube check and voltage and resistance measurements of the stage or circuit should ordinarily be sufficient to isolate the defective part.

97. Voltage and Resistance Checks

Note. Receiver controls must be set as instructed in paragraph 85.

Voltage and resistance diagrams for the various subchassis of the receiver are shown in figures 75 through 81. These illustrations show the values that should be obtained at the tube-socket pins and resistor and capacitor boards. If a value, as read on the meter, such as Multimeter TS-352/U, or equivalent, varies (outside of reasonable tolerance limits) from the value given in the diagrams, the amount of variance should be noted and used to aid in determining

No.	*Sympton*	*Probable trouble*	*Correction*
1.	When the FUNCTION switch is in any position other than OFF, receiver fails to operate and tubes and dial lamps do not light.	Open AC 3 AMP fuse on rear panel.	Replace fuse. If it blows again, check receiver for B+ and filament shorts (par. 90 and 91). Also check for correct power supply connections (par. 15).
2.	Receiver passes if noise test (par. 46*b*) but does not pass rf noise test (par. 46*d*).	Current regulator RT510 burned out or P717 disconnected from J217.	Replace tube. Inspect cable connected to P717.
3.	Tubes and dial light, but receiver is inoperative or insensitive.	Low B supply voltage caused by weak rectifier tubes.	Check for +150 volts at test point E607. Check for +205 to +225 volts at pins 5 and 6 of V603 and V604. If voltage is low, replace V603 and V604.
4.	RF noise is maximum when MEGACYCLE CHANGE control is out of detent position.	Mistracking of RF coils.	Realign rf coils (par. 144).
5.	Noise on any band is less than that on an adjacent band.	Crystal oscillator trimmers misadjusted.	Realign crystal oscillator trimmers (par. 140).
6.	Noise does not drop sharply between detent positions of MEGACYCLE CHANGE control.	If gain is set too high.	Adjust if gain (par. 148).
7.	Calibration signal not present on all bands.	Lack of oscillator injection voltage (par. 93).	Replace proper oscillator tube. Check oscillator crystals (par. 104). Realign crystal oscillator trimmers (par. 140).
8.	Abnormal conditions found during synchronization tests.	Receiver out of synchronization.	Resynchronize (par. 138) receiver.
9.	Excessive error at one end of KILOCYCLE CHANGE control after extreme other end has been calibrated.	Aging has caused vfo range to spread.	Reset vfo end point (par. 150).
10.	Intermittent noise.	Overage tubes.	Isolate noisy tube by tapping and replace.
11.	Binding evident when KILOCYCLE CHANGE knob is turned.	Dial lock disk misplaced.	Readjust disk on shaft.
		Dial lock guide pin not seated in front panel.	Reposition lock.
		Panel bearing out of position, distorting shaft.	Reposition bearing in front panel.
12.	Calibration signal audible on only one band.	Crystal oscillator switch shaft disengaged.	Check and tighten switch linkage (par. 140).
13.	Inaccurate frequency identification when receiver is calibrated.	Calibration crystal off frequency.	Adjust calibration oscillator (par. 146).
14.	Receiver completely operative above 8 mc only.	Trouble in V202 or V207 stages.	These stages are used only from .5 to 8 mc. Test stages by signal substitution and voltage and resistance tests (par. 98 and 97).

which part is at fault. For example, if a 100,000-ohm resistance reading is indicated at a given tube-socket pin on a diagram and the actual reading is 30,000 ohms on the meter, the circuit diagram of the subchassis should be examined for the presence of a resistor or capacitor in the circuit under test that could, if defective, account for the incorrect reading. Such a part would then be suspected and should be checked. There are many ways of using the voltage and resistance diagrams, depending on the resourcefulness of the repairman. Set the receiver controls as instructed in paragraph 85, and change them only if indicated in the particular voltage and resistance diagram.

98. Signal Substitution Notes

Note. The noise tests described in paragraph 46 should be used to localize the trouble to a subchassis or group of stages within a subchassis prior to attempting signal substitution. These tests are simple to conduct, and, in most cases, are as effective as signal substitution.

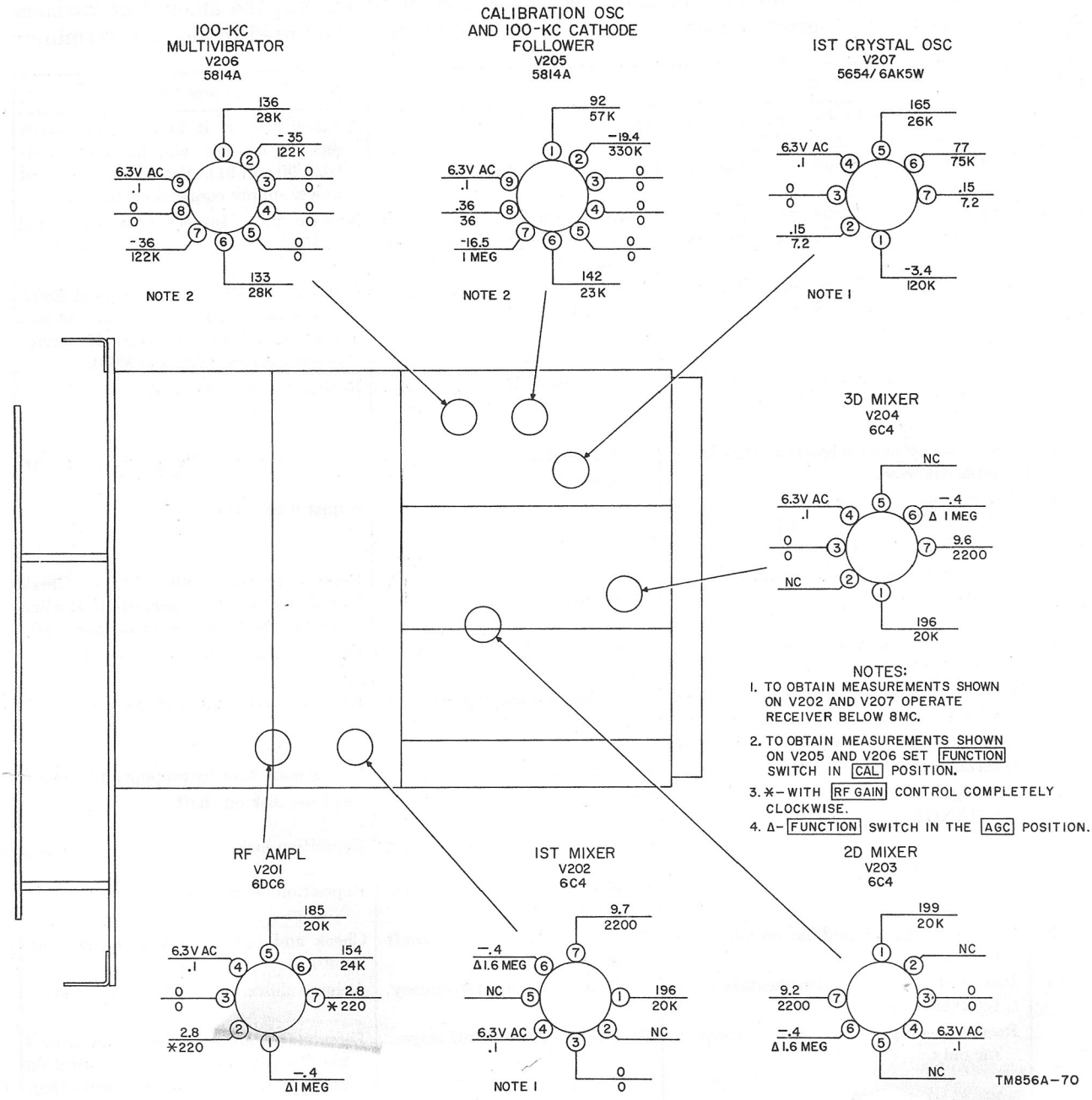

Figure 75. Rf subchassis, voltage and resistance diagram.

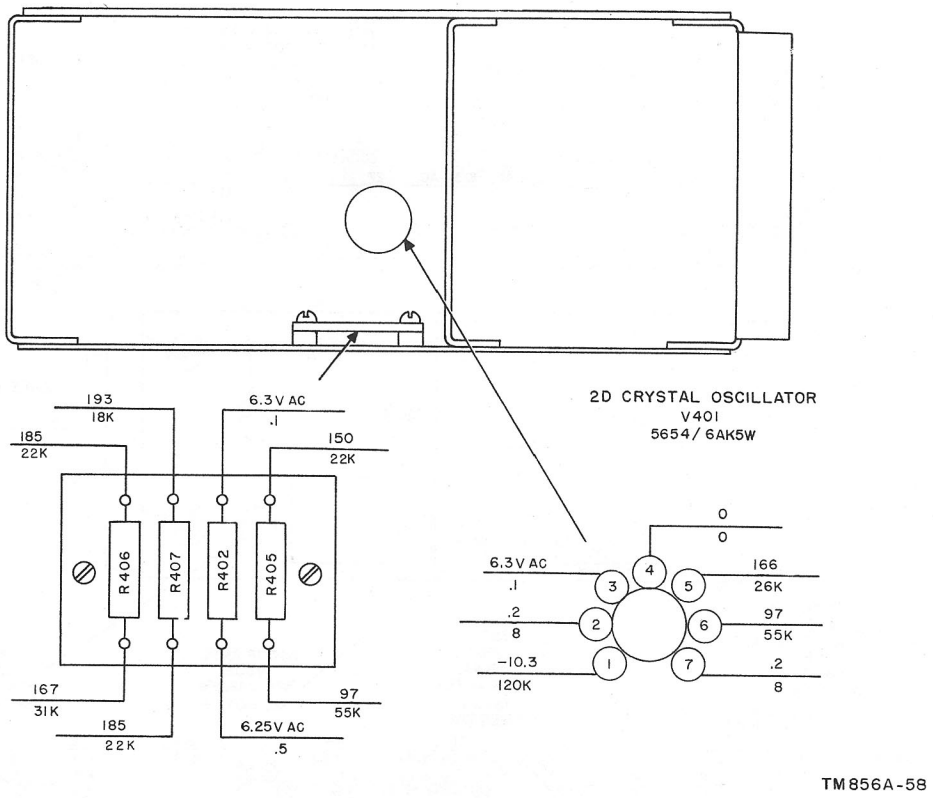

Figure 76. Crystal-oscillator subchassis, voltage and resistance diagram.

a. Signal substitution for Radio Receiver R-390A/URR requires an audio oscillator, such as Audio Oscillator TS-382/U, or equivalent, for checking the audio circuits. An rf signal generator, such as RF Signal Generator Set AN/URM-25, or equivalent, is required for checking the antenna, rf, and if circuits. This signal generator must be able to supply unmodulated and modulated signals from 400 kc to 32 mc. The signal output level of this generator must be continuously adjustable and accurately calibrated from one microvolt to 100,000 microvolts.

b. A multimeter (such as Multimeter TS-352/U, or equivalent) and a tube tester (such as Electron Tube Test Set TV-2/U, or equivalent) are required to isolate troubles in the various stages and tubes.

c. For the tests described in paragraphs 99 through 103, connect the ground lead of the audio oscillator or signal generator to the receiver chassis, and connect the hot lead to the specified point through a capacitor (approximately .05 uf). When using RF Signal Generator Set AN/URM-25, use Test Lead CX-1363/U in place of the .05-uf blocking capacitor. The testing information in paragraphs 86 and 87 should be followed.

d. When performing the signal substitution tests, be sure that the amplitude of the signal from the signal generator or the audio oscillator is sufficient to produce an audio output; however, when working from the output of the receiver towards the antenna, reduce the signal generator or audio oscillator output as required to prevent overloading. Turn the amplitude of the generator all the way down and then raise it to an audible level. This insures that an extremely strong signal is not overloading the receiver, or that the signal is not being forced through a defective stage.

e. Listen to the audio signal in the headset or in the speaker, and determine whether the signal is being distorted. Be sure that the LIMITER control is in the OFF position, otherwise limiter action might distort the audio signal. If another similar receiver is available and in proper operating condition, compare the results between the two receivers.

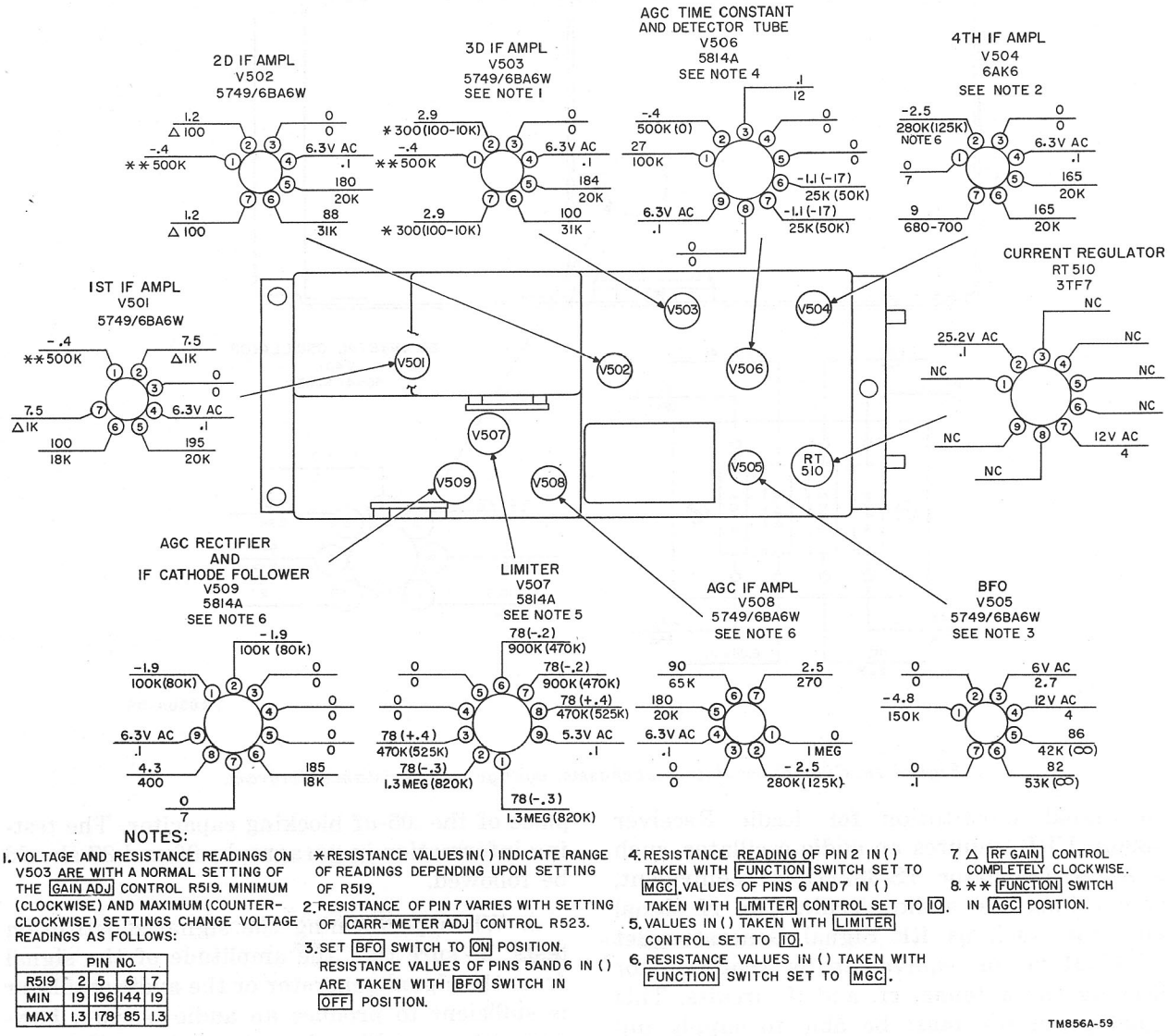

NOTES:

1. VOLTAGE AND RESISTANCE READINGS ON V503 ARE WITH A NORMAL SETTING OF THE GAIN ADJ CONTROL R519. MINIMUM (CLOCKWISE) AND MAXIMUM (COUNTER-CLOCKWISE) SETTINGS CHANGE VOLTAGE READINGS AS FOLLOWS:

	PIN NO.			
R519	2	5	6	7
MIN	19	196	144	19
MAX	1.3	178	85	1.3

* RESISTANCE VALUES IN ( ) INDICATE RANGE OF READINGS DEPENDING UPON SETTING OF R519.

2. RESISTANCE OF PIN 7 VARIES WITH SETTING OF CARR-METER ADJ CONTROL R523.

3. SET BFO SWITCH TO ON POSITION. RESISTANCE VALUES OF PINS 5 AND 6 IN ( ) ARE TAKEN WITH BFO SWITCH IN OFF POSITION.

4. RESISTANCE READING OF PIN 2 IN ( ) TAKEN WITH FUNCTION SWITCH SET TO MGC. VALUES OF PINS 6 AND 7 IN ( ) TAKEN WITH LIMITER CONTROL SET TO 10.

5. VALUES IN ( ) TAKEN WITH LIMITER CONTROL SET TO 10.

6. RESISTANCE VALUES IN ( ) TAKEN WITH FUNCTION SWITCH SET TO MGC.

7. △ RF GAIN CONTROL COMPLETELY CLOCKWISE.

8. ** FUNCTION SWITCH IN AGC POSITION.

Figure 77. If subchassis, voltage and resistance diagram.

f. While performing the signal substitution tests, carefully examine the wiring and the physical condition of the receiver. Sometimes trouble is caused by loose solder or wire chips caused by previous repair or handling. Always be sure that the front-panel controls are set as specified in paragraph 85, or as instructed for the particular procedure.

g. A tuning shaft that is out of synchronization or a coil slug or trimmer capacitor that is misaligned will cause reduced output, or even no output at all. Synchronization of the shafts and cams (par. 138) should be checked, and the proper positioning of the rf, if, and crystal-oscillator band switches should be checked before adjustment of the individual tuned circuits is attempted.

h. When the trouble is isolated to a particular stage, check the most probable cause of trouble first, and then proceed to the other probable causes. Tubes and control settings should be the first items checked. If this fails to reveal the trouble, proceed with voltage and resistance tests.

i. Trouble in a particular stage does not always upset the normal voltage and resistance readings. This is especially true of open capacitors. Open capacitors often can be detected by

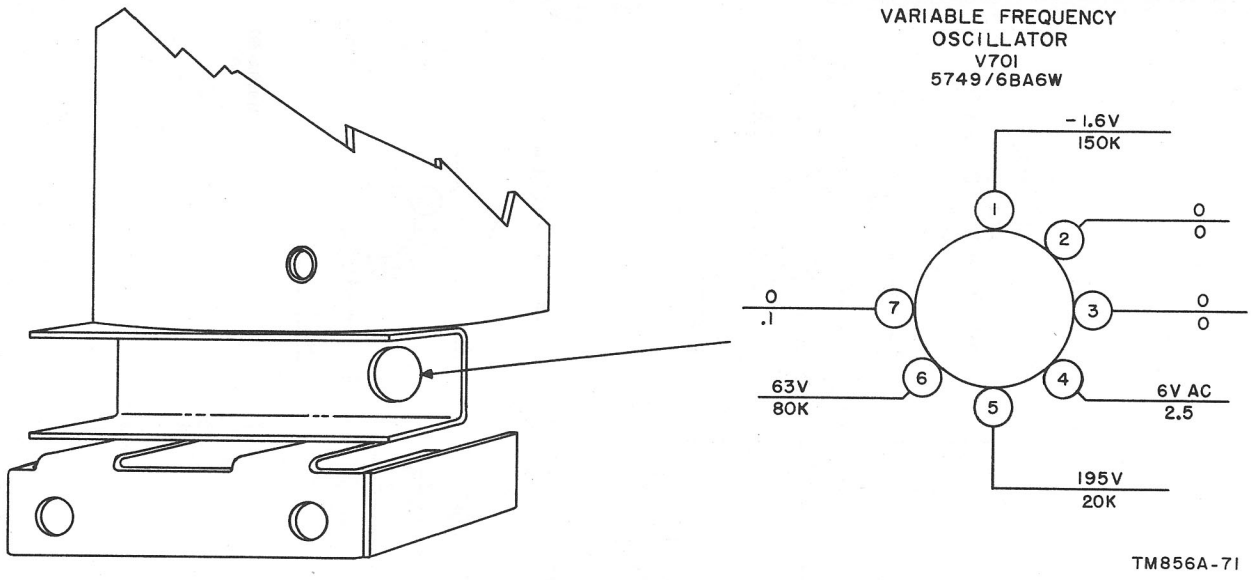

Figure 78. Vfo subchassis, voltage and resistance diagram.

bridging the suspected one with a similar capacitor. This practice is limited by the frequency at which the circuit functions, as serious detuning of rf and if stages might result. The application of this practice and its success depends largely upon the skill and experience of the repairman.

j. When testing tubes, remove one tube at a time. Observe the tube type and check it by substituting it with a tube known to be in good condition; if a tube tester is available, the tube can be checked on it. When inserting tubes into the receiver, be sure their pins are straight and that none of the pins is missing. Be sure to use the proper type tube. A wrong tube installed in the receiver might result in no operation at all, and in certain instances, cause damage to the receiver.

k. Each succeeding step of the signal substitution tests assumes that the preceding steps were made, and that the previously tested stages are functioning properly.

99. Local Audio Channel Tests

Note. Prior to attempting the audio tests, connect the output of the audio oscillator to DIODE LOAD terminal 14 and chassis ground to determine conclusively whether the local and/or line audio channels are functioning. If a clear strong signal is heard at the local and line audio outputs, the audio channels may be assumed to be operating properly.

a. Pin 5 of V603 (Plate of Local AF Output Tube). Apply an af signal to pin 5 of tube socket XV603. Use the full output of the audio oscillator. The audio signal heard in the headphones or speaker will be low. If no signal is heard, check the connections to audio output transformer T601, and also check the dc resistance of the transformer (par. 106).

b. Pin 1 of V603 (Grid of Local Af Output Tube). Apply the audio signal to the grid (pin 1) of tube socket XV603. The audio signal should be loud as compared with the previous step. It may be necessary to reduce the output of the audio oscillator. If there is little or no increase in gain, or the signal sounds distorted, or both, replace tube V603. If this does not improve the condition, check coupling capacitor C605 for leakage and check voltages on this tube.

c. Pin 1 of V602 (plate of Local Af Amplifier Tube). Apply the same level of audio signal to pin 1 of XV602 as that used in *b* above. The audio output level should be approximately the same. If the audio signal is noticeably weaker, or does not exist at all, check capacitor C605 by bridging it with a similar capacitor and repeating the test.

d. Pin 2 of V602 (Grid of Local Af Amplifier). Turn the LOCAL GAIN control on the front panel of the receiver fully clockwise. Ap-

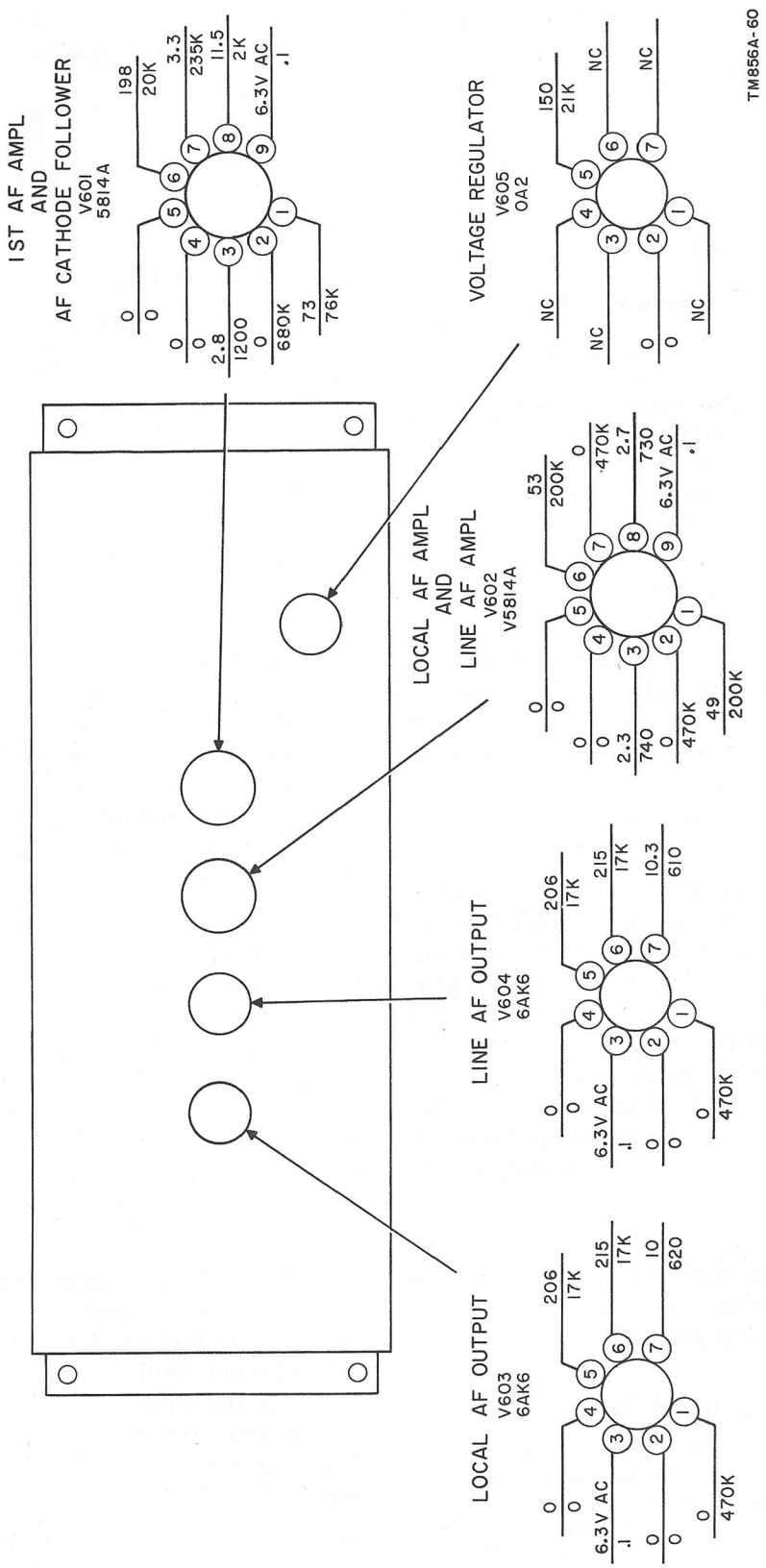

Figure 79. Af subchassis, voltage and resistance diagram.

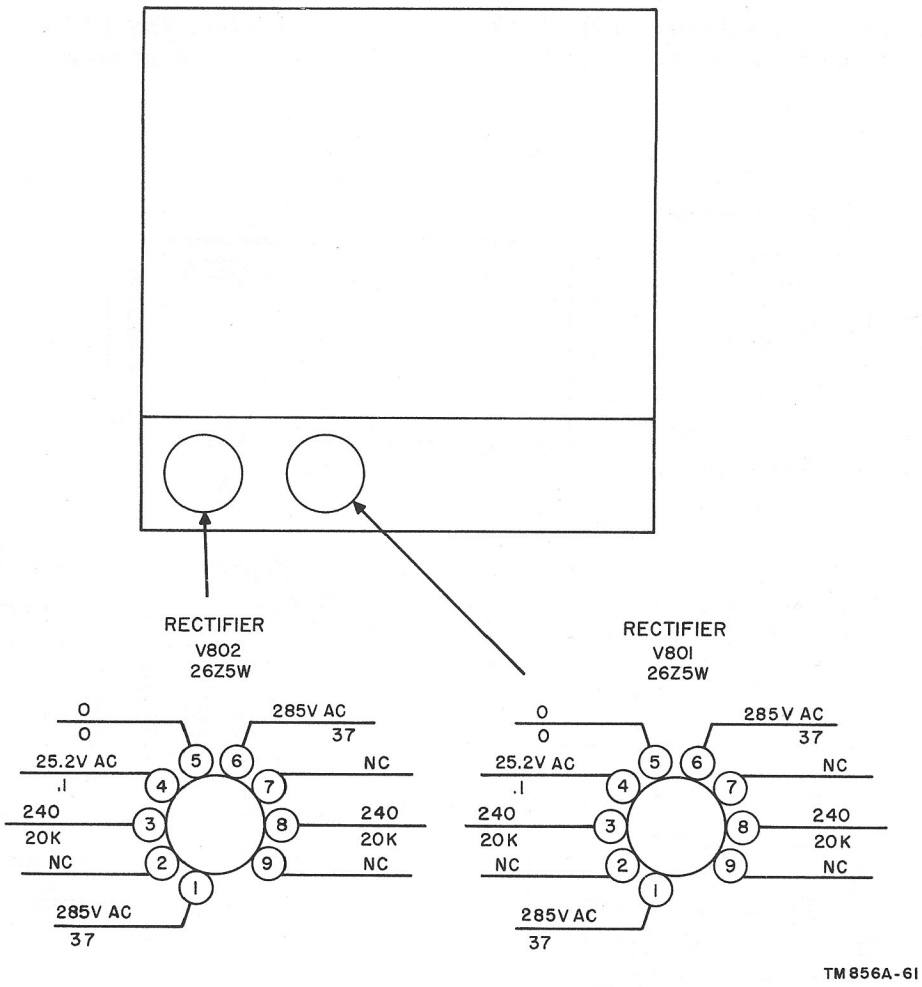

Figure 80. Power-supply subchassis, voltage and resistance diagram.

ply the af signal to pin 2 of XV602. The signal should be much louder than that of the previous steps, and it will be necessary to reduce the af output from the audio oscillator. If the signal is not amplified as it should be, or the signal sounds distorted, or both, check tube V602 by replacing it. If this does not correct the trouble, check voltages, resistance, and parts in the local af amplifier circuit.

100. Line Audio Channel Tests

Connect a headset across the LINE AUDIO terminals on the rear panel of the receiver. The LINE LEVEL meter may also be used to check the output of the line audio channel; however, the headset must be used to detect distortion and noise.

a. Pin 5 of V604 (Plate of Line Af Output Tube). Apply the full output of the audio oscillator to pin 5 of XV604. A weak af signal should be heard in the headset. In no signal is heard, check the leads to af output transformer T602, the dc resistance of T602 (par. 106), the attenuator (R111 through R115), and the wiring in the output circuit of the line audio channel. Terminals 11 and 12 on the rear panel of the receiver must be tied together for this test.

b. Pin 1 of V604 (Grid of the Line Af Output Tube). Apply the af signal to the grid (pin 1) of XV604 of the line af output tube. The af signal should be louder than that in the previous step. If it is not, check tube V604 (by substitution) and coupling capacitor C608 for a short or leaky condition. Check the other voltages on V604 and the associated circuit parts. Check the operation of the LINE LEVEL meter by turning LINE METER switch S105 to each of its positions. Meter deflection should be minimum

on the +10 setting and maximum on the —10 position. If the output from the audio oscillator is extremely high, the LINE LEVEL meter needle may be forced off scale.

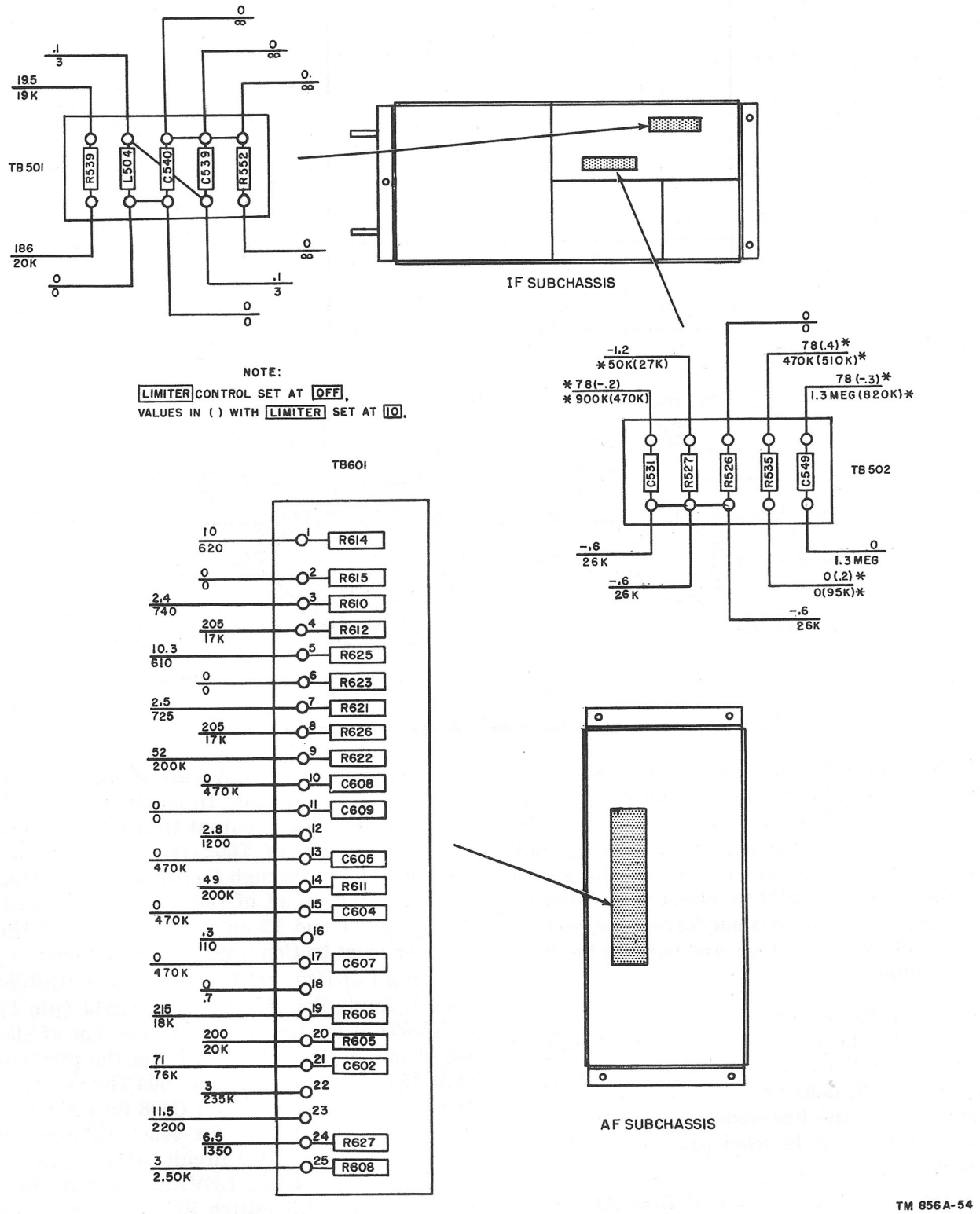

Figure 81. If and af subchassis resistor and capacitor boards, voltage and resistance diagram.

c. Pin 6 of V602 (Plate of Line Af Amplifier). Apply the audio oscillator signal to pin 6 of XV602. The signal should be of approximately the same amplitude as that of the previous step. If it is not, check coupling capacitor C608 for an open by bridging it with a similar capacitor. If this does not correct the trouble, check the circuit voltages and resistances.

d. Pin 7 of V602 (Grid of Line Af Amplifier). Turn the LINE GAIN control fully clockwise. Apply the af signal to pin 7 of XV602. The audio output should be much louder than in the two previous steps. It will be necessary to reduce the output of the audio oscillator. If the signal is not amplified as required, check tube V602 by substitution, check voltages and resistances.

101. Af Amplifier Test

a. Pin 8 of V601. Apply the audio signal to pin 8 of XV601. Be sure the AUDIO RESPONSE switch is set to WIDE. The audio signal output should be considerably weaker than that obtained when the signal was applied to pin 2 of XV602 because of low impedance at the cathode of V601B. If no signal is heard, check tube V601 by substitution. If this fails to correct the trouble, check the voltages, resistances, and parts in the af cathode-follower circuit.

b. Pin 7 of V601. Apply the audio signal to pin 7 of XV601. The audio output should be stronger than that obtained from the previous step. If no audio signal is heard or it is weak and/or distorted, check tube V601B by substitution. If this test fails, check resistors R607 and R608.

c. Pin 1 of V601. Apply the audio signal to pin 1 of XV601. The audio signal output should be the same or weaker than that obtained in the previous step. If no audio output is heard, and the audio signal is weak or distorted, check tube V601 by substitution. If this test fails, check circuit voltages, resistances, and parts.

d. Pin 2 of V601. Apply the audio signal to pin 2 of XV601. The audio signal output heard should be considerably stronger than that observed in the previous test. If this is not the case, check V601 by substitution and check circuit voltages, resistances, and parts.

e. Pin 14 of J620. Apply the audio signal to pin 14 of J620. The signal should be weaker than that obtained in *d* above.

102. If Subchassis Tests

a. Pin 1 or 2 of V507 (Output Plate of Limiter V507). The LIMITER switch should be in the OFF position for this test. Feed an audio signal to pin 1 of XV507. The audio output should be of similar amplitude as that obtained when the audio signal is fed to pin 14 of J620. If this is not the case, check capacitor C549 for an open by bridging it with a similar capacitor. If this test fails, check the wiring from the limiter V507 to the first af amplifier V601.

b. Pins 3 and 8 of V507 (Cathodes of Limiter V507). Apply the audio signal to pins 3 and 8 of XV507. The audio output should be of similar amplitude as the previous step. If this test fails, or the audio signal is weak or distorted, V507 or R535 may be defective.

c. Pin 6 or 7 of V507 (Input Plate of Limiter V507). Apply the audio signal to pin 6 or 7 of XV507. The audio output should be similar in amplitude to that of the previous step. If this test fails, V507 may be defective. Replace by substitution. If tube V507 checks satisfactorily, capacitor V532 may be shorted.

d. Pin 6 or 7 of V506 (Plate of Detector V506B). Apply a modulated 455-kc signal to pins 6 and 7 of XV506 through Test Lead CX-1363/U. Use sufficient 455-kc signal to obtain usable audio output. If this test fails to pass any signal through the detector V506B, the tube may be defective. Test by substitution. If no signal output can be obtained, check to see that there is a jumper between the DIODE LOAD terminals 14 and 15 on the rear panel of the receiver. If the trouble persists, trace the signal path from the detector V506B to the input of limiter V507.

e. Pin 5 of V504 (Plate of Fourth If Amplifier). Apply the modulated 455-kc signal to pin 5 of XV504. The audio output level should be of approximately the same amplitude as the previous test. If this test fails, check tube V504 by substitution. If trouble persists, check circuit voltages, resistances, and individual parts.

f. Pin 1 of V504 (Control Grid of Fourth If Amplifier). Apply the modulated 455-kc signal to pin 1 of XV504. The audio output observed in the headset or loudspeaker should be considerably louder than that obtained in the previous setup. If this is not the case, check

tube V504 by substitution. If trouble persists, check circuit voltages, resistances, and parts.

g. Pins 5 and 1 of First Three If Amplifiers. Set the FUNCTION switch to MGC. Turn the RF GAIN control fully clockwise, and set the BANDWIDTH switch to the 4 KC position. Apply the modulated 455-kc signal to each of the plates and control grids in succession, working from pin 5 of XV503 and finishing on pin 1 of XV501. Each time the modulated 455-kc signal is applied to the grid of the next if amplifier, a noticeable increase in output should be observed. If this is not the case, trouble shoot the particular stage that fails to give the required amplification.

103. Rf Subchassis Tests

Note. Refer to the rf and variable if conversion scheme (par. 107) if alternate test frequencies are attempted.

a. Pin 1 of V204 (Plate of Third Mixer). Apply the modulated 455-kc signal to pin 1 of XV204. The amplitude of the audio output should be approximately the same as that obtained when applying the test signal to pin 1 of V501. If this test fails, check T208 and the connections between the rf subchassis and the if subchassis.

b. Pins 6 and 7 of V204 (Control Grid and Cathode of Third Mixer). Set the frequency indicator to 01 +000, and apply a 2-mc modulated signal to test point E211 (fig. 58). If no output signal is heard, connect an antenna or a 2-mc signal source to test point E211, and at the same time, apply a strong 2455-kc unmodulated rf signal to pin 7 of XV204. The reception of noise or signals indicates a defective vfo. To check the injection voltage of the vfo, turn the FUNCTION switch to STAND BY, and check the dc voltage at test point E211. This voltage is rectified by the cathode and control grid of V204 during the absence of plate voltage on V204. This voltage should be between —2.8 and —4.3 volts dc. If the voltage is not within these limits, check the rf voltage from the vfo. Measure the amount of rf voltage from the vfo by connecting the probe of the ac vtvm to pin 7 of V204. The voltage should measure at least 1.8 volts rms for normal operation. When the trouble is in the vfo, check tube V701; check tube-socket voltages and resistances. If no signal is heard when the 2455-kc unmodulated signal is applied to pin 6 of V204, check third mixer V204 and its tube-socket voltages and resistances.

c. Pin 1 of V203 (Plate or Second Mixer). Apply a modulated 2-mc signal to pin 1 of XV203. A weak output signal may indicate that plate circuits Z216-1 through Z216-3 are not tuned or not properly aligned mechanically.

d. Pins 6 and 7 of V203 (Control Grid and Cathode of Second Mixer). Set the MEGACYCLE CHANGE control to 00, and apply a 17.5-mc modulated rf signal to test point E210, and turn the KILOCYCLE CHANGE knob to 500. If no signal is heard, either the second mixer stage or the second crystal-oscillator stage is defective. To determine which stage is at fault, apply a strong 20-mc unmodulated rf signal to pin 7 of XV203 while test point E210 is connected to an antenna or a 17.5-mc signal source. The reception of static or rf signals indicates a defective second crystal-oscillator stage. Turn the FUNCTION switch to STAND BY. Measure the rectified injection voltage at test point E210. A reading of —3.5 to —8 indicates that injection voltage is available from the second crystal oscillator and that tube V203 has cathode emission. The amount of injection voltage available from the second crystal oscillator is measured by connecting the ac probe of the vtvm to pin 7 of V203. A reading of approximately 1.8 volts ac or higher indicates normal output from the second crystal oscillator. If normal output is not obtained, check tube V401 by substitution. Also check the crystal-oscillator subchassis dial indicator. It should read 0. If the trouble persists, check the crystal, or crystals, in the second crystal-oscillator subchassis associated with this test. This can be done by substituting a similar crystal of the same frequency. If the trouble is not caused by a tube or crystal, check the circuit voltages and resistances, and all parts associated with that circuit. If no output is heard when the proper crystal oscillator signal is applied to pin 7, check second mixer tube V203 by substitution. If this test fails, check tube-socket voltage and resistance measurements and the tuned circuits Z216-1 through Z216-3 for incorrect tuning or mechanical misalignment.

e. Pin 1 of V202 (Plate of First Mixer). Apply a 17.5-mc modulated signal to pin 1 of

tube socket XV202. If no signal is heard or it is weak, check the tuning and mechanical alignment of tuned circuits Z213-1 through Z213-3.

f. Pins 6 and 7 of V202 (Control Grid and Cathode of First Mixer). Apply a .5-mc modulated signal to test point E209. If no signal is heard, apply a strong unmodulated 17-mc signal to pin 7 of XV202 while test point E209 is connected to an antenna or a .5-mc signal source. If static or signals are audible, the trouble is in the first crystal oscillator. Turn the FUNCTION switch to STAND BY and check the injection voltage at test point E209. A dc reading of more than 4.5 volts indicates injection voltage is obtained from first crystal oscillator V207. Measure the ac voltage at pin 7 of V202 with the ac probe of the vtvm. Normal output should be at least 3 volts ac. If the output is not as specified, check tube V207 by substitution, check crystal Y201 by substitution with another 17-mc crystal, and measure the tube-socket voltage and resistances. If the operation of first crystal oscillator V207 is normal, check tube V202 by substitution. If trouble prevails, check the tube-socket voltage and resistances and associated parts.

g. Pin 5 of V201 (Plate of Rf Amplifier). Apply a modulated .5-mc signal to pin 5 of XV201. If the output is below normal, check the tuned circuits that couple rf amplifier V201 and first mixer V202.

h. Pin 1 of V201 (Control Grid of RF Amplifier). Apply the .5-mc modulated rf signal to test point E208. If the signal is weak or absent, check tube V201 by substitution. If this test fails to reveal a defective tube, check tube-socket voltage and resistances.

i. Antenna Input. Connect the .5-mc modulated output of the signal generator to the UNBALANCED or BALANCED ANTENNA connector. If the signal is missing or weak, check the antenna tuning circuits and their selector switches. Check the operation of antenna relay K101 by setting the FUNCTION switch to CAL, and listening for the operation of the relay. 100-kc markers at every 100-kc point on the frequency indicator should be present.

104. Checking Oscillator Crystals

If it is suspected that an oscillator crystal is defective, it can be checked readily by several methods.

a. The first method is to remove the suspected crystal and replace it with a similar crystal of the same frequency. This comparison method depends on the availability of spare crystals.

b. The second method requires the use of a vtvm, such as Electronic Multimeter TS-505/U, or equivalent. A crystal oscillator rectifies grid leak bias when it is oscillating. To determine whether the circuit is operating, measure the control grid voltage for a negative reading. This test determines to some extent the activity of the crystal, as well as the condition of the rest of the circuit. While reading the negative voltage at the control grid of the particular oscillator, remove the crystal and observe the vtvm reading. It should drop to nearly zero. This test however, will not indicate whether the crystal is operating on the correct frequency. It is possible that the crystal may be operating on another mode, possibly far removed from the correct frequency. First crystal oscillator V207 (17 mc) and the calibration oscillator V205A (200 kc) do not have grid test points, and access to the tube sockets must be made before checking the grid leak bias. Grid leak bias of second crystal oscillator V401 can be made at test point E402 (fig. 61).

c. A third method also requires the use of a vtvm. This test is made by setting the FUNCTION switch to STAND BY and measuring the rectified injection voltage at the control grids of the mixer stages. Test points E209 and E210 (fig. 58) are the test points for the first and second mixers, V202 and V203, respectively, and should be used for checking the operation of first crystal oscillator V207 and second crystal oscillator V401, respectively.

d. The fourth method is accomplished by removing the suspected crystal from the receiver and trying it in another receiver.

e. The fifth method of checking receiver crystals consists of feeding the output of the crystal oscillator under test into the antenna receptacle of another receiver. This should be done with very loose coupling, such as through a 1-uuf coupling capacitor. The frequency of the crystal under test should be tuned in on the second receiver and checked for frequency accuracy and quality of signal. Be sure the second receiver is not tuned to a harmonic of the crystal.

105. Stage Gain Charts

The stage gain charts in *a*, *b*, and *c* below list the minimum and maximum voltages required to produce a voltage of —7 volts at the DIODE LOAD terminal 14 at the rear panel of the receiver for if and rf tests. For af tests, the signal input to the af subchassis to produce 500 milliwatts (local af channel) and 10 milliwatts (line af channel) is measured. Use this information to check the gain of the individual stages, as well as the over-all gain of a particular subchassis, or the entire receiver. Before attempting these tests, be sure the trouble is not caused by weak or defective tubes, improper alignment, or misadjustment of GAIN ADJ control R519 on the if subchassis. To obtain the rf or if stage gain readings, connect a vtvm such as Electronic Multimeter TS-505/U, or equivalent, between DIODE LOAD terminal 14 at the rear panel of the receiver and chassis ground. Connect the ground lead of the signal generator or audio oscillator to the receiver chassis ground, and the hot lead to the specified point of signal injection through a .05-uf capacitor. When RF Signal Generator Set AN/URM-25 is used, use Test Lead CX-1363/U in place of the .05-uf blocking capacitor. When checking the if subchassis, access to the tube sockets must be made by connecting the subchassis under test to the main frame with patch cords. Another method necessitates wrapping a small piece of wire around the tube pin, or using tube adapters that are sometimes available (fig. 54). These tube adapters are placed between the tube and tube socket; each pin of the tube is accessible for connection to the test probe. Tune the signal generator to the frequency of test, and adjust the output for a reading of —7 volts. Compare the output of the signal generator with the charts listed below. Readings that are outside these limits do not necessarily indicate improper functioning of the receiver. The gain of individual stages from one receiver to another over a period of time will vary. Set the receiver controls as instructed in paragraph 85, except set the FUNCTION switch to MGC, and change them only when the particular check or test orders different control settings. (See chart at bottom of page.)

a. Rf Subchassis Stages.

Note. Set FUNCTION switch to MGC.

Signal generator output connection	*Balanced Antenna connector*	*Test point E208 grid V201*	*Test point E209 V202*		*Test point E210 V203*			*Test point E211 V204*	
Frequency (mc)	.5–32	.5–32	.5–8	17.5–25	17.5 to 25	3–2	8–32	3–2	.455[a]
Signal generator output (microvolts)	less than 4	4 to 16	15 to 60	15 to 60	20 to 60	13 to 40	20 to 65	50 to 125	20 to 40

[a] Remove the 3- to 2-mc variable if slug rack and tuned circuit Z216-3 before attempting this test [par. 130*a*(1) and (4)].

b. If Subchassis Stages. Set the FUNCTION switch to MGC and set the BANDWIDTH switch to 2 KC, 4 KC, 8 KC, and 16 KC positions for all tests. The variation from the BANDWIDTH switch position of maximum gain to the switch position of minimum gain must not exceed a ratio of two-to-one.

Signal generator output connection	*Signal generator output (microvolts)*
1st if ampl grid (V501)	100 to 200
2d if ampl grid (V502)	250 to 500
3d if ampl grid (V503)	10,000 to 20,000
4th if ampl grid (V504)	300,000 to 400,000

c. Af Subchassis Stages.

(1) Connect the output of the audio oscillator to the DIODE LOAD terminal 14 and chassis ground through a .05-uf capacitor, and adjust it for 400 cps output.

(2) Connect the ac vtvm in parallel with a 600-ohm, noninductive resistor across the LOCAL AUDIO terminals 6 and 7 on the rear panel of the receiver.

(3) Turn the RF GAIN control fully counterclockwise. Turn the LOCAL GAIN control fully clockwise. Set the AUDIO RESPONSE switch at WIDE. Check to see that the LIMITER switch is in the OFF position.

(4) Increase the output of the audio oscillator until 500 milliwatts (17.3 volts rms across 600 ohms) is indicated on the ac vtvm.

(5) Check the output of the audio oscillator. It should be approximately 1 volt.

(6) Transfer the ac vtvm and 600-ohm resistor to LINE AUDIO terminals 10 and 13.

(7) Turn the LINE GAIN control fully clockwise.

(8) Adjust the output of the audio oscillator for an output of 10 milliwatts (2.45 volts rms across 600 ohms).

(9) Check the output of the audio oscillator. It should be less than 1 volt.

106. Dc Resistances of Transformers and Coils

The dc resistances of the windings of the transformers and coils in Radio Receiver R-390A/URR as measured with an ohmmeter, such as Multimeter TS-352/U, or equivalent, are listed below:

a. Main Frame.

Transformer or coil	*Terminals*	*Ohms*
FL101	A–A	less than .1
	B–B	less than .1
K101	1–2	200

b. Rf Subchassis.

Transformer or coil	*Terminals*	*Ohms*
HR202	1–3	5
L201		7
L202		.6
L203		.6
L204		.6
L205		.6
L206		.6
L207		.6
L208		7
L208		7
L210		.15
L211		7
L236		.3
T201	1–2	less than .2
	4–6	2.7
T202	1–2	less than .2
	4–6	1.2
T204	1–2	less than .2
	4–6	.4
T205	1–2	less than .2
	4–6	less than .2
T206	1–2	less than .2
	4–6	less than .2
T207	1–2	less than .2
	3–4	less than .2
T208	1–5	2.5
	2–3	2
	3–4	2
	2–4	4
Z201–1	1–3	2.8
Z202–1	1–3	1.8
Z203–1	1–3	1.2
Z204–1	1–3	.5
Z205–1	1–3	.2
Z206–1	1–3	less than .2
Z201–2	1–3	2.8
Z202–2	1–3	1.8
Z203–2	1–3	1.2
Z204–2	1–3	.5
Z205–2	1–3	.2
Z206–2	1–3	less than .2
Z213–1	1–3	less than .2
Z213–2	1–3	less than .2
Z213–3	1–3	less than .2
Z216–1	1–3	1.1
Z216–2	1–3	1.1
Z216–3	1–3	1.1

c. Crystal-oscillator Subchassis.

Transformer or coil	*Terminals*	*Ohms*
HR401	gnd J410–E	11
L401		7
L402		.6
T401	1–2	less than .1
	3–4	less than .1

d. If Subchassis.

Transformer or coil	*Terminals*	*Ohms*
FL502	1–2	40
	3–4	40
FL503	1–2	40
	3–4	40
FL504	1–2	40
	3–4	40

Transformer or coil	*Terminals*	*Ohms*
FL505	1–2	40
	3–4	40
L501		7
L502		90
L504		3
L505		90
RT510	2–7	8
T501	1–2	6
	4–5	6
T502	1–2	6
	4–5	6
T503	1–2	6
	3–4	6.1
	4–5	6.3
	3–5	.2
Z501	1–2	4.8
Z502	1–2	.2
	1–3	1.8
	2–3	1.6
Z503	1–5	18

e. Af Subchassis.

Transformer or coil	*Terminals*	*Ohms*
FL601	1–2	230
	2–3	250
	1–3	480
K601	1–7	2.8
L601	1–2	130
L602	1–2	125
L603	1–2	110
T601	1–2	580
	3–4	28
	5–6	30
T602	1–2	580
	3–4	28
	5–6	30

f. Vfo Subchassis.

Transformer or coil	*Terminals*	*Ohms*
L706		.6
Z702	1–2	4
	3–4	.5

107. Rf and Variable If Conversion Scheme

a. Use the chart in *e* below to understand and check the frequency conversion scheme. The output of third mixer V204 is fixed at 455 kc, and the first crystal oscillator is 17 mc. The following is an example of the use of the frequency conversion chart.

Frequency of received signal .... 7145 kc
Frequency indicator reading 07 145
Band (mc) 7
Position of switch S201 and range of antenna and rf coils (mc) 4-8
Position of switch S401 7
First variable if (mc) 24.145
Second crystal-oscillator crystal frequency (mc) 9
Second crystal-oscillator output frequency (mc) 27
Second variable if (mc) 2.855
Vfo frequency (mc) 3.310

b. The first variable if equals the first crystal-oscillator frequency (17 mc) plus the frequency being received when the received frequency is between .5 and 8 mc. When receiving signals above 8 mc, first mixer V202 and first crystal oscillator V207 are disabled.

c. The second variable if equals the difference between second crystal-oscillator V401 output frequency and the first variable if. The second variable if range is from 3 to 2 mc on all bands except the .5- to 1-mc band. On this band, the range is 2.5 to 2.0 mc.

d. The vfo frequency equals the second variable if plus the fixed if output of third mixer V204 (455 kc). The vfo frequency range is from 3.455 mc to 2.455 mc on all bands except the .5- to 1-mc band. On this band, the range is from 2.955 mc to 2.455 mc.

107. *e.*

Band (mc)	*Position of switch S201 and range of antenna and rf coils (mc)*	*Position of switch S401*	*1st variable if range (mc)*	*2d xtal osc crystal freq (mc)*	*2d xtal osc output freq (mc)*
5–1	.5–1	.5	17.5–18	10.0	20.0
1–2	1–2	1	18–19	10.5	21.0
2–3	2–4	2	19–20	11.0	22.0
3–4	2–4	3	20–21	11.5	23.0
4–5	4–8	4	21–22	12.0	24.0
5–6	4–8	5	22–23	12.5	25.0
6–7	4–8	6	23–24	13.0	26.0
7–8	4–8	7	24–25	9.0	27.0
8–9	8–16	8		11.0	11.0
9–10	8–16	9		12.0	12.0
10–11	8–16	10		13.0	13.0
11–12	8–16	11		14.0	14.0
12–13	8–16	12		15.0	15.0
13–14	8–16	13		16.0	16.0
14–15	8–16	14		17.0	17.0
15–16	8–16	15		9.0	18.0
16–17	16–32	16		9.5	19.0
17–18	16–32	17		10.1	20.0
18–19	16–32	18		10.5	21.0
19–20	16–32	19		11.0	22.0
20–21	16–32	20		11.5	23.0
21–22	16–32	21		12.0	24.0
22–23	16–32	22		12.5	25.0
23–24	16–32	23		13.0	26.0
24–25	16–32	24		9.0	27.0
25–26	16–32	25		14.0	28.0
26–27	16–32	26		14.5	29.0
27–28	16–32	27		15.0	30.0
28–29	16–32	28		15.5	31.0
29–30	16–32	29		16.0	32.0
30–31	16–32	30		11.0	33.0
31–32	16–32	31		17.0	34.0

108. B+ Distribution Notes

Many troubles can be caused by faults in the B+ distribution circuits. Make voltage measurements of these circuits early in the trouble-shooting procedure. Figure 103 presents B+ distribution for the entire receiver.

109. Agc Voltage Distribution Notes

Agc troubles with the receiver can be detected in several ways. The loss of agc bias at the control grids of tubes V201 through V204 and V501 through V503 can cause excessive receiver gain; blocking will result on moderately strong or strong signals. Several methods for checking the agc circuits are explained below. Use figure 104 when trouble shooting agc trouble.

a. Resistance Check. With the power plug disconnected from the source of ac receiver power and the FUNCTION switch on AGC, check the dc resistance between ground and AGC NOR terminal 4. It should be no less than 500,000 ohms. If it is less than this, a tube or agc bypass capacitor might be shorted or leaky. This condition can be further traced by disconnecting P108 and P112, one at a time; observe the ohmmeter for a change in the dc resistance to ground of the agc line. The checking can be carried still further by removing the tubes controlled by agc and checking the dc resistance of the bypass capacitors on the agc line.

b. Agc Voltage Check. Some agc troubles, such as gassy tubes, will not be evident unless the receiver is operating. This type of trouble can be checked by operating the receiver with the FUNCTION switch on AGC, and receiving a moderate to strong signal from a radio station or signal generator. With the jumper connected across AGC NOR terminals 3 and 4, check the agc bias with a vtvm. Do not use a

voltmeter with an input resistance of less than several megohms. With the vtvm connected between chassis ground and AGC NOR terminal 4, vary the output of the signal generator, or detune the receiver slightly. The vtvm indication should rise and fall as this is done. Adjust the receiver so that a reference agc voltage is established at the AGC NOR terminal, and then proceed to check the agc voltage at test points E208 through E211 on the rf subchassis and at the control grids of the controlled tubes in the if subchassis. If the agc voltage established at the AGC NOR terminal 4 is absent, or considerably lower, at any of these check points, replace the particular tube with one known to be good. The questionable tube may be gassy.

c. Tube Substitution. Once it has been determined that agc trouble exists, substitute the tubes controlled by the agc bias. More than one such tube may be causing the trouble; temporarily replace all questionable tubes. Be sure to replace all the original tubes that are in good condition when the check is concluded.

d. Fixed Bias Source. A means of furnishing a variable source of negative dc bias to the agc line can be made up as follows: Provide a dc source of 9 or 10 volts, such as series-connected batteries, and wire a variable resistor across the dc source. The total resistance of this variable resistor should be between 1,000 and 100,000 ohms. Connect the positive side of the dc voltage source to the chassis ground. Remove the jumper from AGC NOR terminals 3 and 4, and connect the slider on the variable resistor through a 1,000-ohm resistor to AGC NOR terminal 4. This resistor provides protection if the FUNCTION switch is accidentally turned to MGC. This variable bias device replaces the agc-producing circuit in the receiver, and allows the repairman to determine whether the agc circuit is operating. It also provides a reference bias level for testing as explained in *b* above. A vtvm should be connected between chassis ground and AGC NOR terminal 4 for setting the bias reference level.

110. Mechanical If Filter Tests

The band-pass characteristics of each individual mechanical if filter can be determined by performing the selectivity tests outlined in paragraph 161. If the band-pass characteristics of one of the filters is abnormal and the others conform properly, the particular filter is probably defective. The db loss in each filter should be approximately 8 db. This attenuation can be checked by using the CARRIER LEVEL meter and a signal from a signal generator or reliable signal from a radio station by comparing the signal level through the other mechanical filters. Both band pass and db losses can be caused by a failure of the small mica capacitors connected to the input and output windings of the mechanical filters. When replacing these items, be sure to replace them with exactly the same value capacitor, because the resonance and band pass of each filter depend on the correct capacitance. The input and output coil resistances are given in paragraph 106.

111. Band-pass Filter Test, 800-cps

The attenuation of this filter can be checked by comparing the audio level with the AUDIO RESPONSE switch in the WIDE position and then in the SHARP position. The resulting audio levels should be approximately the same. The LINE LEVEL meter, LINE METER switch, and the LINE GAIN control can be used in making this test. The dc resistance of the 800-cps audio filter is given in paragraph 106.

112. Checking Oven Thermostats

This procedure outlines the method for determining whether the thermostats in the crystal ovens open and close properly. The testing is done with an ohmmeter, such as that incorporated in Multimeter TS-352/U, or equivalent. Begin this test after the receiver has been turned off for an hour or so, to be sure that the ovens have cooled.

a. Oven HR202.

(1) Disconnect P108 from J208, and connect the ohmmeter between chassis ground and pin F on J208.

(2) Set the ohmmeter range switch to X10 and observe the reading. It should be approximately 100 ohms. This indicates that the thermostat switch is closed.

(3) Wrap a thin wire around pin 1 of HR202 and connect it to one side of an ac voltmeter. Connect the other side of the meter to chassis ground.

(4) Reconnect P108 and J208, and turn the receiver on; set the FUNCTION switch to AGC or MGC. Allow the receiver to operate for approximately 10 minutes. Note that the ac voltmeter reading changes as the oven is turned on and off, indicating that the thermostat is operating.

b. Ovens HR401 and HR701.

(1) Connect a 0- to 5-ampere ac ammeter across OVENS switch S106. This closes the oven circuits.

(2) With the receiver operating, the ac ammeter will indicate zero when both thermostats are open, and approximately 2 amperes for each oven when they operate.

113. Checking Relays K101 and K601

If the operating condition of relay K101 or K601 is doubtful, check it by disconnecting the relay from the receiver and actually checking its operation and the condition of its contacts. The dc resistance of the relays is given in paragraph 106; relay K601 should operate when the voltage across its winding is raised from 0 volt to 5.6 volts ac. The contacts should be checked with an ohmmeter for continuity when the relay is operated and not operated. Use the receiver schematic diagram (fig. 106) for identifying the terminals. Relay K101 should operate when the voltage across its winding is raised from 0 volt to 16 volts (rectified, but not filtered ac).

114. Checking Rectifiers CR101 and CR102

a. Crystal Rectifier CR101. Crystal rectifier CR101 can be checked by measuring the forward and reverse current through it.

Caution: Always begin the test with the arm of the potentiometer adjusted to deliver 0 volt, otherwise the rectifier or the milliammeter will be damaged. Proceed as follows:

(1) Connect a 50,000-ohm potentiometer across a 22½-volt battery.

(2) Connect the negative side of this variable voltage supply to AGC DIV terminal 5 on the rear panel.

(3) Connect a 0- to 15-volt voltmeter across the variable voltage supply.

(4) Connect a 0 to 1 milliammeter between the arm on the potentiometer and AGC NOR terminal 3.

(5) Increase the voltage output of the supply until 10 volts is read on the meter.

(6) The reverse current should not exceed .075 milliampere.

(7) Turn the potentiometer back to 0 volt output, and reverse the terminal 3 and 5 connections.

(8) Replace the 0 to 1 milliammeter with a 0 to 10 milliammeter.

(9) Adjust the potentiometer for a 1-volt reading.

(10) The forward current through CR101 should be at least 4 milliamperes.

b. Selenium Rectifier CR102. Turn the FUNCTION switch to CAL, turn the OVENS switch to ON, and measure the dc voltage between the red and blue terminals on CR102 (fig. 57). It should be at least 19 volts dc with full load applied. If the voltage is considerably less than this, check the ac voltage between chassis ground and the yellow terminal on CR102. This voltage should be approximately 25.2 volts ac. If the dc voltage output of the rectifier is considerably less than 19 volts dc, replace CR102, and recheck the dc voltage between the red and blue terminals.

115. Checking Current-regulator Tube RT510

Remove the current-regulator tube RT510 from the tube socket, and measure the dc resistance between pins 2 and 7. The dc resistance should be approximately 8 ohms. Also check the voltages on the heaters of the tubes that are connected in series with RT510 across the 25.2-volt winding of the power transformer (fig. 77, 78, and 102).

116. Checking LINE LEVEL and CARRIER LEVEL Meters

a. LINE LEVEL Meter. The accuracy of this meter can be checked by comparing its readings with those obtained when performing the audio output tests (par. 155). When readings on the LINE LEVEL meter are not as they should be, check the resistors on front-panel terminal board TB101 (fig. 74). These resistors are in

the line audio circuit, and the failure of one of them will affect the readings, and possibly, the audio output level at LINE AUDIO terminals 10 through 13 on the rear panel of the receiver.

b. CARRIER LEVEL Meter. This meter is most easily checked by comparing its readings with those of a similar meter known to be in good operating condition.

117. Checking Lamp I 103

This lamp can be checked by applying 90 volts dc or 65 volts ac across its terminals. This is the minimum voltage required to ionize the gas in it.

118. Main Frame Resistance and Continuity Chart

This chart can be used as a trouble-shooting aid when tracing wires in the main frame of the receiver. The *From* and *To* columns indicate the wire continuity, and the *Notes* column gives additional information, such as wire color, ground connections etc. This chart should be used with the main frame wiring diagram (fig. 105).

From	*To*	*Notes*
S101-3	P112-11	White - green
S101-2	S102-2B	White - red
S102-B	F101-2	White - orange
S102-A	P111-7	White - orange
S102-8B	P119-3	White - red - blue
S102-1B	P119-2	White - red - green
S102-2B	P112-2	White - red
S102-4B	P108J	White - black - green
S102-5B	P119-8	White - black - red
S102-7B	P119-4	White - brown - red
S102-8F	P119-7	White - red - orange - blue
S102-5F	TB102-3	White - orange
S102-6F	R103-1	White
S103-3	TB103-9	White - brown - red - orange
S103-2	P119-1	White - black - red - orange
S104-1	P120-6	Shielded wire, black
S104-2	P120-5	Shielded wire, red
S104-4	R104-1	White - black
S104-6	P120-1	Shielded wire, yellow
S104-7	P120-4	Shielded wire, green
S104-8	P120-7	Shielded wire, brown
S105-8	TB101-7	White - green - blue
S105-7	TB101-3	White - blue
S105-4	TB101-9	White - brown - blue
S105-3	TB101-11	White - black - blue
S105-10	TB101-10	White - black - red - green
S105-9	TB101-12	White - black - red - blue
S107-9	S108-6	White
S107-8	P112-15	White - orange - green
S107-7	P112-13	White - red - orange - green
J102-2	TB102-8	Shielded wire, white - blue
J102-1	TB102-7	Shield, white
S108-7	P112-10	White - orange - blue
S108-5	P112-9	White - red - orange
R120-3	TB103-15	Shielded wire, orange
R120-1	TB103-16	Shield
R104-1	R105-1	Shielded wire, white - black
R104-3	R105-3	Shield
R104-2	P120-3	Shielded wire, white - orange
R104-3	P120-13	Shield
R105-1	P120-2	Shielded wire, white - black
R105-3	P120-13	Shield
R105-2	P120-1	Shielded wire, white
R105-3	P120-13	Shield
R103-1	MF gnd-34	Main frame ground, white
R103-2	TB102-2	White - brown - green
M101 (+)	TB101-8	White - black - orange
M102 (+)	P112-14	White - black - orange
M102 (—)	P112-12	White - brown - orange
TB101-1	P119-10	White - black
I 101-C	MF gnd-32	Main frame ground, white
P119-2	P109-A	White - red
P119-2	P110-A	White - red
P119-2	P108-K	White - red - green
P119-4	P109-B	White - brown - red
P119-4	P108-D	White - brown - red
P119-4	P110-C	White - brown - red
P119-5	P111-5	White - red
P119-6	CR102-Y2	White - brown
P119-9	TB102-6	White - green
P119-10	P111-10	White - black
P119-11	MF gnd-34	Main frame ground, white
P120-8	M101 (+)	White - black - orange
P120-9	TB103-11	White - black - blue
P120-10	TB103-12	White - brown - blue
P120-11	TB103-14	Shielded wire, white - brown
P120-13	TB103-16	Shield
P120-12	TB101-4	White - green
P120-13	MF gnd-34	Main frame ground, white
P120-14	P112-7	Shielded wire, orange
P120-13	P112-17	Shield
P109-D	S106-ON	White - brown
P109-E	S106-ON	White - brown
P109-F	MF gnd-34	Main frame ground, white
P109-H	P112-19	White - black - blue
P109-J	MF gnd-34	Main frame ground, white
P109-K	MF gnd-34	Main frame ground, white
P111-1	P112-8	White - brown
P111-1	S106-OFF	White - brown
P111-2	MF gnd-33	Main frame ground, white
P111-6	FL101-A	White - orange
P111-10	P112-20	White - black
P111-11	MF gnd-33	Main frame ground, white
TB103-10	TB101-6	White - red - blue
TB103-13	TB101-5	White - black - red
TB103-14	P112-5	Shielded wire, white - brown
TB103-16	P112-17	Shield
TB103-15	P112-3	Shielded wire, orange
TB103-16	P112-17	Shield
TB103-16	MF gnd-33	Main frame ground, white
C103 (+)	P112-16	White - blue
C103 (—)	MF gnd-32	Main frame ground, white

From	*To*	*Notes*
P108-H	MF gnd-33	Main frame ground, white
TB102-1	C103 (+)	White - blue
TB102-3	P112-4	White - orange
TB102-4	P112-6	White - black - red
TB102-7	MF gnd-33	Main frame ground, white
P112-2	P108-A	White - red
P112-16	P108-C	White - blue
S106-0N	P110-E	White - brown
S106-0N	P110-F	White - brown
P112-17	MF gnd-32	Main frame ground, white
P112-18	MF gnd-32	Main frame ground, white
P112-20	P110-B	White - black
P112-20	P108-B	White-black
P112-6	P108-E	White - black - red
P112-20	P108-F	White - brown
P110-D	MF gnd-32	Main frame ground, white
P110-H	MF gnd-32	Main frame ground, white
CR102-Y1	S106-0FF	White - brown
CR102 (—)	K101-1	White - black - red - green
CR102 (+)	K101-2	White - black - red - blue
P111-3	P111-4	Jumper
M101	S105	White - red

119. Resistance Measurements at Subchassis Connectors

Shorts and opens sometimes can be localized by measuring the resistance to ground of the terminals on the subchassis power connectors. The charts below indicate what the resistance readings should be on properly functioning subchassis.

a. Rf Subchassis.

Terminal of receptacle J208	*Resistance to ground (ohms)*
A[a]	110K
B	.8
C	Inf
D[a]	Inf
E	Inf
F	100
H	0
J[a]	Inf
K[a]	Inf

b. Crystal-oscillator Subchassis.

Terminal of receptacle J410	*Resistance to ground (ohms)*
A[a]	Inf
B	10
C[a]	Inf
D	0
E	11
F	11
H	0

[a]B+ terminal.

c. If Subchassis.

Terminal of receptacle J512	*Resistance to ground (ohms)*
1	Inf
2[a]	54K
3	53K
4	500K
5	Inf
6	Inf
7	Inf
8	Inf
9	Inf
10	420K
11[a]	Inf
12	25
13	2 meg
14	0 to 20
15	140K
16	105K
17	0
18	0
19	Inf
20	.5

d. Af Subchassis.

Terminal of receptacle J619	*Resistance to ground (ohms)*
1	3.6
2	90K
3	90K
4	90K
5[a]	90K
6	Inf
7	Inf
8[a]	Inf
9	80
10	Less than .1
11	0

Terminal of receptacle J620	*Resistance to ground (ohms)*
1	Inf
2	1 meg
3	Inf
4	500K
5	200
6	Inf
7	200
8	Inf
9	Inf
10	Inf
11	Inf
12	Inf
13	0
14	1.4 meg
15	Inf

[a]B+ terminal.

e. Vfo Subchassis.

Terminal of receptacle J709	*Resistance to ground (ohms)*
A[a]	Inf
B[a]	Inf
C	Inf
D	Inf
E	Inf
F	0
H	3.5
J	Inf
K	Inf

f. Power Supply Subchassis.

Terminal of receptacle J811	*Resistance to ground (ohms)*
1	Less than .1
2	0
3	Inf
4	Inf
5[a]	Inf
6	Inf
7	Inf
8	Inf
9	0
10	Less than .1
11	0

[a]B+ terminal.

120. Calibration Oscillator Circuit Wave Forms

Checking the shape and amplitude of the wave forms is sometimes useful when trouble shooting the calibration oscillator circuit. To perform this check, turn the FUNCTION switch to CAL, and check the wave forms with an oscilloscope. They should conform with the data given in the chart below. Values varying 20 per cent above or below those specified are normally acceptable.

Tube and pin	*General shape*	*Amplitude, volts peak to peak*
V205-1	Sine wave, 200 kc	20 volts
V205-8	Square wave, 100 kc	.75 volt
V206-1	Nonsinusoidal wave, 100 kc	85 volts
V206-2	Nonsinusoidal wave, 100 kc	65 volts
V206-6	Nonsinusoidal wave, 100 kc	85 volts
V206-7	Nonsinusoidal wave, 100 kc	65 volts

Section III. REPAIRS

121. General Notes on Removals and Replacements

a. General. Instructions for the removal and replacement of subassemblies and detail parts in Radio Receiver R-390A/URR are given in paragraphs 122 through 131. All the subchassis, except the rf subchassis, can be removed from the main frame of the receiver without removal of the front panel or other subassemblies in the receiver. Avoid changing the setting of the KILOCYCLE CHANGE control or any of the switches or shafts operated by the MEGACYCLE CHANGE control when the rf, if, and vfo subchassis are operated out of the receiver main frame. If these controls are operated, reset them to their previous settings.

b. Captive and Mounting Screws. All the threaded fasteners that secure the subassemblies to the main frame of the receiver are color-coded with green screw heads. Loosen and remove only these screws unless otherwise instructed. The only exceptions to the use of the green-headed screws are the front-panel screws that secure the front panel of the receiver. Some of the securing screws are the conventional threaded type, and the remainder are captive screws. Captive screws remain attached to the subassembly they secure when the subassembly is removed from the main frame. All captive and mounting screws are loosened and removed with the Phillips screw driver supplied with the receiver. All knobs, shaft couplers, gears, and cams are loosened and removed with the No. 8 Bristo (fluted) wrench also supplied with the receiver.

c. Connectors. All rf and power connectors used in the receiver are readily removed by hand. The rectangular power connectors are removed by pulling them outward with a slight rocking motion. The polygon-shaped power connectors have locking shells that must be rotated counterclockwise before removing them from their mating connector. The coaxial rf-type connectors also must be rotated counterclockwise before removing them from their mating connectors. In several cases, the removal of an rf connector can be made easier by the use of long-nosed pliers or a long, narrow, plier-

type tool that will readily grip the connector. Replacement of the connectors is the reverse of removal. Be careful when aligning the pins on the connectors, otherwise they might be broken or bent. Examine the pins on the connectors before attempting to join them with their mating connectors. This will indicate the proper pin alignment and reveal damaged pins.

d. Receiver Handling. The use of two wooden blocks about 2 inches thick and 12 inches long is necessary for supporting the main frame of the receiver when it is placed on a bench or table. Place the wooden blocks under the bottom side edges of the receiver. This allows the front panel to be removed and rested on its handles.

122. Front-panel Removal and Replacement

a. General. The front panel has to be removed whenever the removal of the rf subchassis and its rf gear train assembly is required. Following the proper steps in removing the front panel is important, otherwise damage or mechanical misalignment of the tuning system can result.

b. Removal.

(1) Turn the KILOCYCLE CHANGE knob fully counterclockwise to the stop (approximately —963 on kilocycle counter).

(2) Turn the MEGACYCLE CHANGE knob fully counterclockwise to the stop (approximately 00 on the megacycle counter).

(3) Set the BFO PITCH control to 0, and the BANDWIDTH control to 16 KC.

(4) Remove the MEGACYCLE CHANGE, KILOCYCLE CHANGE, ANT TRIM, and DIAL LOCK knobs. Turn the shaft on the DIAL LOCK fully counterclockwise, loosen the hexagonal nut on the shaft, and turn the DIAL LOCK mechanism behind the panel so that it is in a vertical position, and is free from the locking plate on the KILOCYCLE CHANGE shaft.

(5) Loosen, but do not remove, the BFO PITCH shaft coupler behind the front panel. Grasp the BFO PITCH knob and pull the knob and shaft outward from the front panel. This will separate the shaft and coupler.

(6) Loosen the BANDWIDTH shaft coupler, and pull the knob and shaft outward.

(7) Remove the four 5/8-inch by 8-32 flat Phillips screws on the left side of the front panel (fig. 82). They are vertical and in line with the left front-panel handle. Remove the four similar screws on the right side of the front panel. Remove the five 7/16-inch by 6-32 flat Phillips screws and external tooth lock washers on the front panel. All screws to be removed are shown in figure 82.

Caution: Be sure the DIAL LOCK mechanism does not bind on the riveted locking plate (fig. 86) mounted on the KILOCYCLE CHANGE shaft.

(8) Grasp the front-panel handles and pull forward with a slight vertical rocking motion. The front panel will separate from the main frame, while riding on the shafts of the KILOCYCLE CHANGE, MEGACYCLE CHANGE, and ANT TRIM controls.

(9) Carefully lower the front panel to the bench top, resting on the handles. Be sure that the main frame is resting securely on the wooden blocks.

c. Replacement.

(1) Grasp the front panel by the two handles and slide it forward on the KILOCYCLE CHANGE, MEGACYCLE CHANGE, and ANT TRIM shafts with a slight vertical rocking motion, while pushing forward.

(2) Check to see that the DIAL LOCK mechanism is in a vertical position and that the ZERO ADJ knob is fully counterclockwise.

(3) Grasp the DIAL LOCK shaft and rotate the mechanism so that its jaws loosely clutch the riveted locking plate on the KILOCYCLE CHANGE shaft. Set the mechanism in the position that allows the raised surface on the mechanism to fall into the aligning dimple on the rear side of the front panel.

(4) Replace the eight 5/8-inch by 8-32 screws and the five 7/16-inch by 6-32 screws with their five lock washers that secure the front panel.

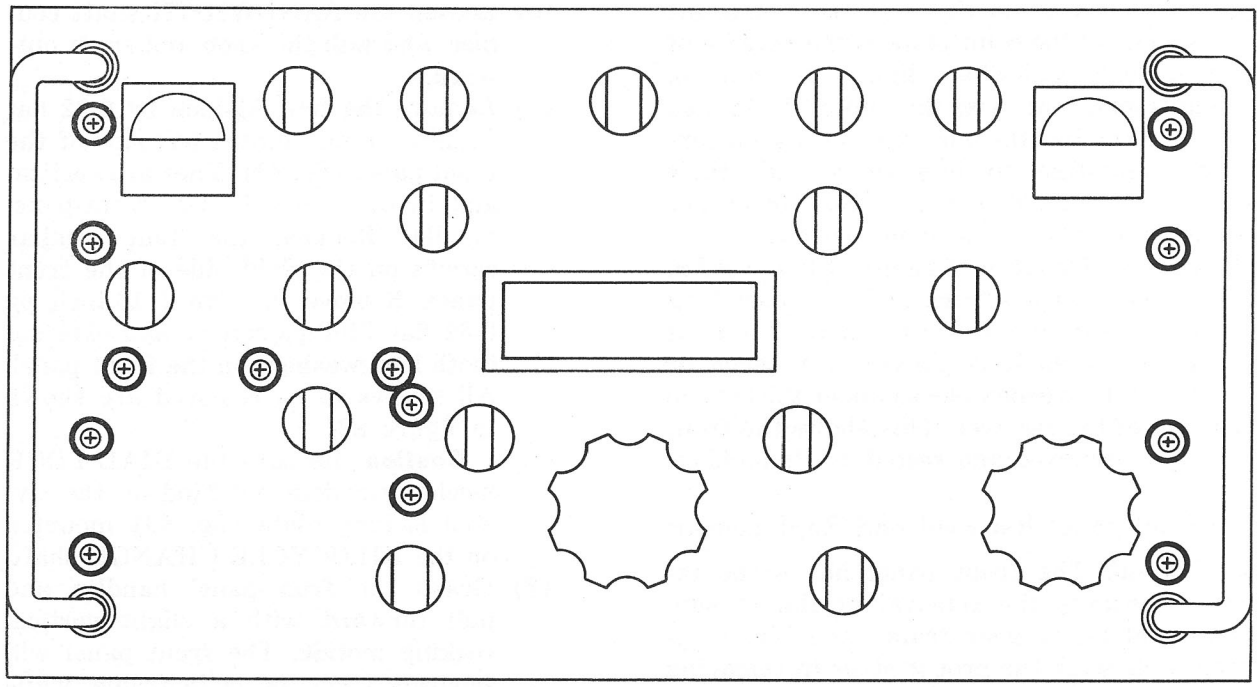

TM856A-87

Figure 82. Front-panel removal, location of screws.

(5) Turn the DIAL LOCK hexagonal nut fully clockwise with the fingers, and tighten the hexagonal nut with a suitable ½-inch socket wrench. Replace the knob, allowing for a ⅛-inch clearance between the knob and the front panel. This prevents the knob from binding on the front panel when the DIAL LOCK is turned fully clockwise.

(6) Replace the remaining knobs on their respective shafts. The MEGACYCLE CHANGE and KILOCYCLE CHANGE knobs should have a ⅛-inch clearance from the front panel to avoid binding.

(7) Engage and tighten the shaft couplings on the BANDWIDTH and BFO PITCH controls. Be sure that the BANDWIDTH control is tightened on the 16 KC position and that the BFO PITCH control is tightened on 0.

(8) Turn all the knobs previously removed through their entire range, and check for smoothness of operation and freedom from binding. Also check them for correct positioning on their respective shafts.

(9) If the Oldham coupler and its antibacklash spring on the vfo subassembly were removed in a previous operation, replace them.

123. Rf Subchassis Removal and Replacement

a. General. Removal and replacement of the rf subchassis is the most complicated of all subchassis removals and replacements. Generally, the crystal-oscillator subchassis is removed with the rf subchassis because this is simpler than removing the rf subchassis separately. To remove the crystal-oscillator subchassis from the rf subchassis when both are removed from the main frame, follow the instructions in paragraph 124.

b. Removal. To remove the rf subchassis and crystal-oscillator subchassis, proceed as follows:

(1) Remove the antibacklash spring from the Oldham coupler (fig. 67 and 89) on the vfo subassembly and place it in a tray or container to prevent losing or damaging it.

(2) Remove the front panel (par. 122).

(3) Disconnect plugs P110, P205, P206, P207, P717, P213, P218, and P108 (fig. 56).

(4) Remove the two 5/16-inch by 6-32 Phillips green-headed screws and lock washers just below and beyond the front auxiliary gear plate. One of the screws is accessible through an access hole in the front auxiliary gear plate and is just below the clutch gear (fig. 86).

(5) Remove the two ½-inch by 6-32 Phillips green-headed screws and lock washers from the left side of the rf subchassis, just below the main frame deck, through the access hole provided in the left side of the main frame. These screws are located behind the LOCAL GAIN control, when the front panel is in place.

(6) Remove the three ½-inch by 6-32 Phillips green-headed screws and lock washers that are located at the right side of the main frame.

(7) Loosen the two green-headed captive screws at the rear of the crystal-oscillator subchassis, and the two green-headed captive screws at the rear of the rf subchassis.

Caution: Once again, be sure that the cables listed in (3) above are disconnected.

(8) Turn the KILOCYCLE CHANGE shaft fully counterclockwise against the stop.

Caution: During the performance of the next step, the Oldham coupler on the vfo subassembly shaft will come apart and the center disk will fall to the bench. Pick up the center disk and place it with the Oldham coupler antibacklash spring for safekeeping.

(9) Grasp the rf subassembly by the two 5⅝-inch spacers and lift it carefully upward out of the main frame. Place the rf subchassis on the bench. Remove the crystal-oscillator subassembly only when necessary (par. 124).

c. Replacement. Instructions for replacement of the rf subchassis with the crystal-oscillator subchassis attached follow: If the crystal-oscillator subchassis has been removed from the rf subchassis, secure it to the rf subchassis (par. 124).

Caution: Before reinstalling the subchassis, be sure the KILOCYCLE CHANGE shaft is fully counterclockwise.

(1) If the center disk of the Oldham coupler has been removed, smear some grease on it and place it on the end disk attached to the vfo subchassis shaft.

(2) Grasp the rf subchassis by the two 5⅝-inch spacers and place it into the main frame. Retain the rf subchassis in place by starting, but not tightening, one or two of the Phillips green-headed machine screws and their lock washers. Leaving these screws loose allows shifting of the subchassis when starting the other screws.

Caution: Be careful not to damage the metal grounding strips that contact the bottom edges of the rf and crystal-oscillator subchassis. To prevent damage to the parts on the front panel, temporarily slide the front panel onto the KILOCYCLE CHANGE and MEGACYCLE CHANGE shafts prior to setting the receiver on its side.

(3) Set the receiver on its left side with two wooden blocks under it and check the fitting of the Oldham coupler on the vfo subchassis. The center disk of the Oldham coupler should join the two end disks with about 1/32-inch play in the coupler (fig. 89).

(4) Engage the two green-headed captive screws at the rear of the crystal-oscillator subassembly. Do not turn them down all the way. Also, engage, but do not turn down, the two green-headed captive screws at the rear of the rf subassembly.

(5) Engage the three Phillips green-headed screws and their lock washers at the right side of the main frame, and the two Phillips green-headed screws at the left side of the main frame. Engage the two Phillips green-headed screws and lock washers at the front under the clutch gear and tuning mechanism.

(6) Tighten all green-headed screws in the following order:

(*a*) Three at the right side.

(*b*) Four captive screws at the rear of both subchassis.
(*c*) Two at the left side.
(*d*) Two below the clutch gear.

(7) Reconnect plugs P110, P717, P205, P206, P207, P213, P218, and P108.
(8) Replace the front panel (par. 122).

124. Crystal-oscillator Subchassis Removal and Replacement When Rf Subchassis is Retained in Main Frame

a. General. Two methods for the removal of the crystal-oscillator subchassis are possible. This procedure is for the removal of the crystal-oscillator subchassis when the rf subchassis is to be retained in the main frame of the receiver. The procedure described in (2) through (8) below is for the removal of the crystal-oscillator subchassis from the rf subchassis when the rf and crystal-oscillator subchassis have been previously removed from the main frame.

b. Removal.

(1) Remove the front panel (par. 122).
(2) Disconnect plugs P110 and P215 (fig. 56).
(3) Temporarily replace the MEGACYCLE CHANGE knob and turn it so that the gears are positioned with their holes lined up with the access hole in the front plate. This makes one of the Phillips green-headed screws accessible.
(4) Remove this 5/16-inch by 6-32 screw and its lock washer and the two other green-headed screws and their lock washers. These three screws fasten to the front edge on the crystal-oscillator subchassis.
(5) Loosen, but do not remove, the shaft clamp set screw on the crystal-oscillator drive shaft.
(6) Loosen the two green-headed captive screws at the rear of the crystal-oscillator subchassis.
(7) Temporarily disconnect plugs P205, P206, and P207 (fig. 56) to provide enough clearance for subchassis removal.

Caution: Be careful not to damage the metal grounding strip that contacts the bottom edges of the rf and crystal-oscillator subchassis.

(8) Raise the rear end of the subchassis approximately ¼ inch, slide the subchassis backward, and lift it out of the main frame.
(9) Reconnect plugs P205, P206, and P207.

c. Replacement.

(1) The crystal-oscillator subchassis dial indicator should read the same number as the first two digits of the frequency indicator on the front panel of the receiver. If this is not the case, turn the switch shaft with a screw driver through the access hole provided at the rear of the subchassis. Turn over the subchassis and inspect the positioning of the rotor and its fixed mating contact on each of the two sections of the switch. Adjust the shaft slightly to make the contacts mate satisfactorily.

Note. The crystal-oscillator shaft may be adjusted at the rear of the crystal-oscillator subchassis when the subchassis is mounted in the main frame. This is done with a long-shafted screw driver through the SYNC XTAL OSC hole at the rear of the receiver main frame.

(2) Temporarily disconnect plugs P205, P206, and P207 (fig. 56).

Caution: Be careful not to damage the metal grounding strip that contacts the bottom edges of the rf and crystal-oscillator subchassis.

(3) Place the subchassis in position on the deck of the main frame, and carefully slide it forward and engage the drive shaft.
(4) Engage, but do not tighten, the two green-headed captive screws at the rear of the subchassis.
(5) Tighten the set screw in the shaft coupler on the crystal-oscillator drive shaft, and be sure that the collar and gear are pushed against the oilite bearing on the subchassis.
(6) Replace the three Phillips green-headed screws and their lock washers at the front of the crystal-oscillator subchassis. Long-nosed pliers may be used to hold the screws while starting them.
(7) Tighten the two green-headed captive screws at the rear of the subchassis.

(8) Reconnect plugs P205, P206, P207, P110, and P215.

(9) Replace the front panel (par. 122).

125. If Subchassis Removal and Replacement

a. General. Removal of this subchassis does not require the removal of other subchassis or parts except for those connectors that connect to the subchassis.

b. Removal. The if subchassis is removed as follows:

(1) Disconnect plugs P112, P114, P213, and P218 (fig. 56).

(2) Set the BANDWIDTH switch to the 16 KC and the BFO PITCH control to 0.

(3) Loosen the shaft couplers on the BANDWIDTH and BFO PITCH controls. Slide the knobs and shafts outward.

(4) Loosen the three green-headed captive screws that secure the if subchassis to the main frame.

(5) Lift the if subchassis out of the main frame.

Note. Do not change the settings on the BANDWIDTH and BFO PITCH shafts unless absolutely necessary. If they are moved, it will be necessary to reset them when replacing the if subchassis in the main frame.

c. Replacement. Replace the if subchassis into the main frame of the receiver as follows:

(1) Set the if subchassis into the main frame of the receiver.

(2) Engage, but do not tighten, the three green-headed captive screws.

(3) Slide the shafts and couplers of the BANDWIDTH and BFO PITCH controls forward so they engage the shafts on the if subchassis.

(4) Before tightening the couplers, set the BANDWIDTH knob to 16 KC, and the BFO PITCH knob to 0, and then tighten the couplers.

(5) Reconnect plugs P112, P114, P213, and P218.

(6) Tighten the three green-headed captive screws.

126. Af Subchassis Removal and Replacement

a. General. The af subchassis can be removed from the main frame without removing other subchassis or parts, with the exception of those cable connectors that connect directly to the subchassis.

b. Removal.

(1) Disconnect plugs P119 and P120 (fig. 57).

(2) Loosen the four green-headed captive screws that secure the af subchassis to the main frame.

(3) Lift the af subchassis from the main frame.

c. Replacement.

(1) Place the af subchassis into the main frame.

(2) Engage and tighten the four green-headed captive screws.

(3) Reconnect plugs P119 and P120.

127. Vfo Subchassis Removal and Replacement

a. General. Removal of this subchassis does not require the previous removal of any other subchassis, but does require careful handling, otherwise damage or misalignment of the vfo subchassis may result.

Caution: Avoid turning the vfo subchassis shaft or the KILOCYCLE CHANGE shaft on the rf gear train assembly, otherwise the vfo will be misaligned. If the KILOCYCLE CHANGE shaft must be turned, record the setting and be sure to return it to the same setting before replacing the vfo. Do not disturb the Oldham coupler shaft clamps.

b. Removal.

(1) Remove the Oldham coupler antibacklash spring on the vfo subchassis drive shaft and place it in a tray for safekeeping.

(2) Turn the KILOCYCLE CHANGE control so that one slot in the Oldham coupler is vertical and the other is horizontal.

(3) Loosen the three green-headed captive screws that secure the subchassis.

(4) Loosen, but do not remove, the two Phillips screws that secure the triangular bracket at the rear of the vfo subchassis. This is done to provide extra clearance for the removal of the subchassis.

(5) Disconnect plugs P109 (fig. 57) and P717 (fig. 56).

(6) Carefully remove the vfo subchassis from the main frame. The center disk of the Oldham coupler will fall free. Place it in a tray with the antibacklash spring for safekeeping until the vfo subchassis is to be replaced.

c. Replacement. Replace the vfo subchassis as follows:

(1) Smear some grease on the center disk of the Oldham coupler and stick it in place against the first disk of the vfo drive shaft of the rf gear train tuning assembly.

(2) Lower the vfo subchassis into position in the main frame and engage the Oldham coupler; at the same time, engage, but do not tighten, the three green-headed captive screws. Replace the Oldham coupler antibacklash spring.

Note. The act of remating the Oldham coupler will accurately and correctly reposition the vfo shaft.

(3) Tighten the two Phillips screws that secure the triangular-shaped bracket at the rear of the vfo subchassis.

(4) Tighten the three green-headed captive screws.

(5) Reconnect plugs P109 and P717.

(6) Check the frequency of the vfo (par. 139) if the shaft on the vfo was turned from its original setting.

128. Power-supply Subchassis Removal and Replacement

a. General. Removal and replacement of the power-supply subchassis does not require the removal or replacement of other subchassis or parts in the receiver, except for connector P111, which connects to the subchassis.

b. Removal.

(1) Disconnect plug P111 (fig. 57).

(2) Loosen the six green-headed captive screws that secure the subchassis to the main frame of the receiver.

(3) Carefully withdraw the subassembly from the receiver. Be careful not to drop it; it is heavy.

c. Replacement.

(1) Carefully lower the power-supply subchassis into the receiver. Be careful not to drop it on the bench or into the receiver.

(2) Engage the six green-headed captive screws that secure the power-supply subchassis into the receiver. Tighten each of the six captive screws.

(3) Reconnect plug P111.

129. Antenna Relay Assembly Removal and Replacement

a. General. Removal of the antenna relay assembly is necessary whenever a relay, resistor R121, neon lamp I 103, or a connector must be replaced.

b. Removal. Remove the antenna relay assembly as follows:

(1) Disconnect plugs P205, P206, and P207 (fig. 56).

(2) Loosen and remove the four Phillips screws that secure the antenna relay assembly to the rear panel of the receiver.

(3) Turn over the antenna relay assembly so that the soldered wires can be reached and unsolder the wires. Tag the wires, or make a note of the connections, and keep this information for reference when replacing the assembly.

(4) Remove the antenna relay assembly.

c. Replacement. Replace the antenna relay assembly as follows:

(1) Place the antenna relay assembly into

the main frame, and turn it over so that the solder terminals on the relays can be reached. Solder the wires to the terminals as indicated by the tags on the wires, or with reference to the notes made at the time of removal.

(2) Hold the antenna relay assembly in its proper position against the rear panel of the receiver and engage and tighten the four Phillips mounting screws.

(3) Reconnect plugs P205, P206, and P207.

130. Removal and Replacement of Parts Within Subchassis

a. Rf Subchassis Parts.

(1) *Slug racks and springs.* Remove the slug racks by disengaging the retaining springs and lifting the slug racks out of the coils and away from the chassis. A paper clip or short piece of solid wire can be fashioned into a hook for disengaging the springs. Use paper clips for securing the springs to the gear and cam plates while the slug racks are removed from the coils and transformers.

(2) *Band switch shaft.* The band switch shaft can be removed from the eight wafer switches by loosening its drive gear and removing the retaining ring. Continue the removal by sliding the shaft towards the rear of the chassis, but be sure not to disturb the setting of the rotors in each wafer switch. When replacing the shaft, be careful not to damage or turn the rotors on these wafer switches.

(3) *Crystal oven HR202* (fig. 58). The crystal oven is removed from its octal socket by first removing the retaining springs and plate and then pulling it upward out of the socket. Disassembly of the crystal oven is shown in figure 83 and should be used as a guide in replacing the plug-in crystals. The internal construction of certain crystal ovens from various suppliers will vary with respect to internal construction; however, the location of crystals with respect to the octal base will be the same.

(4) *Coils and transformers tuned by mechanical tuning system.* Remove these coils and transformers by first removing the slug racks and springs, and then inserting a Phillips screw driver into the slug hole, and proceeding to loosen the Phillips screw that fastens the coil or transformer to the chassis. These coils and transformers are plugged into small jacks fastened to the chassis and can be removed by pulling them upward away from the chassis. The covers on these coils and transformers are removed by pressing the tabs on the sides of the cans inward, and lifting the cover off the coil or transformer.

(5) *Coaxial connectors.* Remove these connectors by unsoldering the wires and loosening the hexagonal nuts that secure them to the chassis or panel to which they are fastened.

(6) *If transformers.* The if transformers that are not slug-tuned are secured to the chassis by two hexagonal nuts and lock washers. Unsolder the leads and remove the nuts and lock washers. Two hexagonal nuts and lock washers on the tops of the covers must be removed to remove the covers.

b. Crystal-oscillator Subchassis.

(1) *Oven cover.* The oven cover is removed by loosening and removing one Phillips screw and lock washer on the top of the chassis and two similar screws and lock washers at the rear end of the chassis. Lift the cover straight off the chassis; two small plugs (P416 and P417) connect with two jacks (J416 and J417) on the chassis. Do not loosen or remove the four Phillips screws and lock washers on the top of the cover unless it is necessary to remove the heater winding and insulation from the oven.

(2) *Trimmer capacitors.* The 24-screwdriver-adjusted trimmer capacitors are

secured to the chassis with 6 Phillips screws and lock washers that must be removed before the capacitor board assemblies can be dropped out of place. The individual capacitors cannot be replaced individually, and to replace a defective capacitor of this type, the entire board assembly must be replaced. If this becomes necessary, be sure to identify each lead before it is unsoldered so that it will be reconnected properly.

(3) *Crystal-oscillator band switches and shaft.* To remove the band switch shaft, first remove the retaining ring at the front of the subchassis. Continue by sliding the shaft towards the rear of the chassis and out the access hole provided. Be sure not to turn the shaft when removing it, especially after removing it from the front wafer switch. To remove the switches, unsolder all the wires; make a sketch of their placement as they are removed.

c. If Subchassis.

(1) *If transformers.* The if transformers are secured to the chassis with two hexagonal nuts and lock washers. The covers on these transformers are removed by loosening and removing two hexagonal nuts and lock washers on the top of the transformers. To check the alignment of transformers T501 through T503 and tuned circuit Z503, the top cover must be removed as described. These transformers and coils have a broad frequency response and require no alignment except at the time of their replacement. There are two cores to adjust in T501 through T503. They are physically located one below the other. A special hexagonal alignment tool must be provided for this purpose. To adjust the bottom core, the alignment tool must be dropped down through the top core.

(2) *Mechanical filters.* The mechanical filters are located beneath a square-shaped cover, which is removed by loosening and removing one Phillips screw and its lock washer at the top of the cover. The mechanical filters below the cover are each removed by unsoldering the wires attached to them, and loosening the two Phillips screws and lock washers that secure them to the chassis.

(3) *Bfo assembly.* To remove the bfo assembly (Z502, fig. 66) from the underside of the if subchassis, first loosen the Bristo screws on the bellows-type coupler, and then remove the retaining ring at the front of the chassis that secures the bfo shaft in place. Next, slide the bellows-type coupler forward and unsolder the wires connected to this assembly. After this is done, unscrew the four Phillips screws and lock washers that secure the U-shaped bfo mounting bracket to the chassis. The bfo assembly, with the U-shaped bracket, now can be removed from the subchassis.

(4) *BANDWIDTH shaft and switches.* The shaft is removed from the chassis by loosening the two Bristo screws on the shaft coupler. The shaft now can be slid backward and out the access hole provided at the rear of the chassis.

(5) *Terminal boards.* Terminal boards, parts on the terminal boards, and parts in the vicinity of the terminal boards, can be reached by removing the screws that secure the terminal boards to the subchassis partitions. An offset screw driver is useful for removing some of the screws.

d. Af Subchassis.

(1) *Filter capacitors.* Remove the two multisection filter capacitors located on this subchassis by first loosening their hold-down clamps. Pull the filter capacitors out of their octal sockets similar to an octal tube.

(2) *Chokes, relays, and transformers.* These parts are secured to the subchassis by Phillips screws and lock washers.

(3) *Terminal board.* Remove the terminal board located under the af subchassis

by removing the two Phillips screws and lock washers to reach certain other parts.

e. Vfo Subchassis.

(1) *External cover.* Remove the external cover on the vfo subchassis by first removing power connector J709 (fig. 67) and the three Phillips screws and lock washers spaced 120° around the lower edge of the cover. Remove this cover only to check or remove the thermostat and bypass capacitor. Do not remove the inner cover of the vfo.

(2) *Chassis cover.* The small U-shaped chassis cover can be removed by removing the three small Phillips screws and lock washers.

(3) *Thermostat.* Thermostat S701 is a separate unit and can be removed from the heater winding cover assembly. The external vfo cover should first be removed as instructed in (1) above, and then the three screws around the lower edge of the heater winding cover and sealed inner cover should be removed. *Do not remove the sealed inner cover, as this will break the seal of the vfo tuning unit.* Unsolder the thermostat lead wires, and carefully lift the heater winding cover upward. Now the thermostat can be slid downward out of the cylindrical compartment that holds it. When replacing the thermostat, carefully slide it upward into the cylindrical compartment, taking note of the positioning of the compartment slot and the aligning pin on the thermostat. Be sure that the cylindrical partition is not damaged or dented, as this will impair the operation of the thermostat. Replace the three screws, and resolder the thermostat lead wires.

f. Antenna Relay Assembly. Most of the parts in the antenna relay assembly are removed by unsoldering and unscrewing the particular parts. The exception to this is resistor R121 and neon lamp I 103. These parts are simply unsoldered.

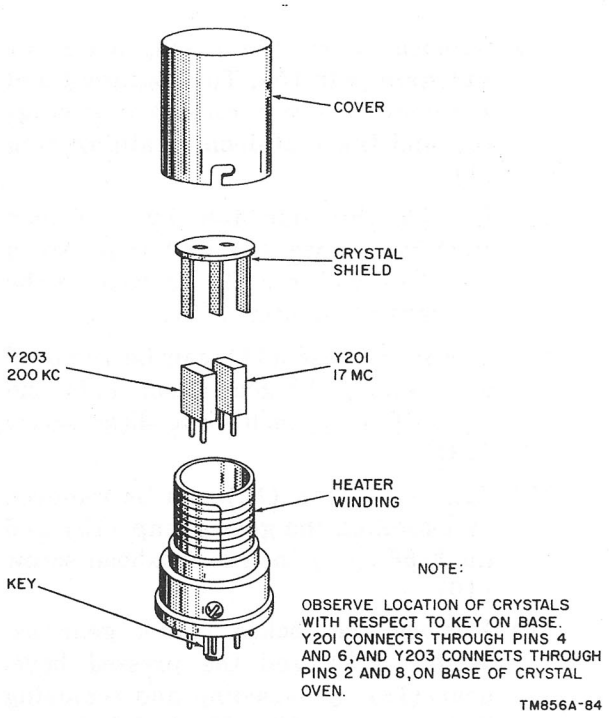

Figure 83. Location of crystals Y201 and Y203.

131. Disassembly and Reassembly of Rf Gear Train Assembly

(fig. 84)

a. General. Under certain circumstances, such as extensive damage, it may be necessary to disassemble and reassemble all or part of the rf gear train assembly. The instructions given in this paragraph should be used as a guide when the method of removal and replacement of parts is not obvious. The numbers used in the instructions refer to those that identify the parts in figure 84. When disassembling the rf gear train assembly, place parts in trays or containers in the order of disassembly. This will simplify reassembly.

b. Disassembly.

(1) Remove the 8 cam racks and 16 tension springs.

(2) Remove the front panel (par. 122).

(3) Remove the rf subchassis (par. 123).

(4) Set the frequency indicator to 07 +000.

(5) Loosen gear clamp (1) by loosening the 4-40 by 9/16-inch socket-head screw (2) and the 4-40 square nut (3).

(6) Remove the riveted locking plate (4) and spur gear (5). To separate 4 and 5, remove the two rack gear springs (6) and the 7/16-inch retaining ring (7).

(7) Remove the four 4-40 by 5/16-inch machine screws (8) and four No. 4 split lock washers (9) to remove the mechanical counter (10).

(8) The bevel gear (11) can be removed by loosening the gear clamp (12) and the 3/56 by ¼-inch socket-head screw (13).

(9) The bevel gear (14) can be removed by loosening the gear clamp (15) and the 3/56 by ¼-inch socket-head screw (16).

(10) Remove the locked clutch gear assembly (17) and the pressed bevel gear (18) by loosening and removing the spur gear (19), .312-inch hole gear clamp (20), 4-40 by ½-inch socket-head screw (21), 4-40 square nut (22), and two washers (23).

(11) Remove the bevel gear (24), gear clamp (25), gear bushing (26), and 4-40 by 9/16-inch socket-head screw (27).

(12) Disassemble the Oldham coupler between the vfo subassembly and rf gear train assembly if this has not been done previously.

(13) Remove the ¼-inch retaining ring (28) from the pinned stop assembly (29), and remove stop assembly (29) and the washers (30 and 31). These washers are used to shim the stop assembly (29).

(14) Remove the pressed auxiliary gear plate assembly (32) by loosening and removing the six 8-32 by ⅜-inch binder-head screws (33), six No. 8 split lock washers (34), one special screw (35), and one No. 5 split lock washer (36). Pull the pressed auxiliary gear plate assembly (32) forward and remove.

(15) Remove the pressed gear (37) by removing the ¼-inch E-type retaining ring (38).

(16) Remove the staked gear post (39) and two 6-32 by 3/16-inch machine screws (40).

(17) Remove the pinned gear assembly (41), gear bushing (42), and washers (43) from the riveted front gear plate (155).

(18) Remove the pinned gear assembly (44) and washers (45).

(19) Loosen or remove the detent spring (46) by loosening or removing the two 6-32 by ¼-inch binder-head machine screws (47), two No. 6 split lock washers (48), and two No. 6 flat washers (49).

(20) Pull off the final differential gear assembly (50).

(21) Pull off the pinned gear (51).

(22) Remove the No. 8 riveted gear (52) by first removing the ¼-inch retaining ring (53).

(23) Pull out the pinned spur gear (54) with the spur gear (55), .312-inch hole gear clamp (56), 4-40 by ½-inch socket-head screw (57), 4-40 square nut (58), and gear bushing (59).

(24) Remove the loaded rack gear assembly (60), .312-inch hole gear clamp (61), 4-40 by ½-inch socket-head screw (62), and 4-40 square nut (63) by loosening screw (62).

(25) Remove the No. 4 gear assembly (64), .312-inch hole gear clamp (65), 4-40 by ½-inch socket-head screw (66), and 4-40 square nut (67) by loosening screw (66).

(26) Remove the soldered rack gear (68), gear clamp (69), 4-40 by 9/16-inch socket-head screw (70), 4-40 square nut (71), the gear assembly consisting of the retaining ring (72), soldered gear (73), spur gear (74), and two gear rack springs (75) by loosening screw (70) and removing retaining ring (72).

(27) Remove the gear assembly consisting of the soldered rack gear (76), gear clamp (77), 4-40 by 9/16-inch socket-head screw (78), 4-40 square nut (79),

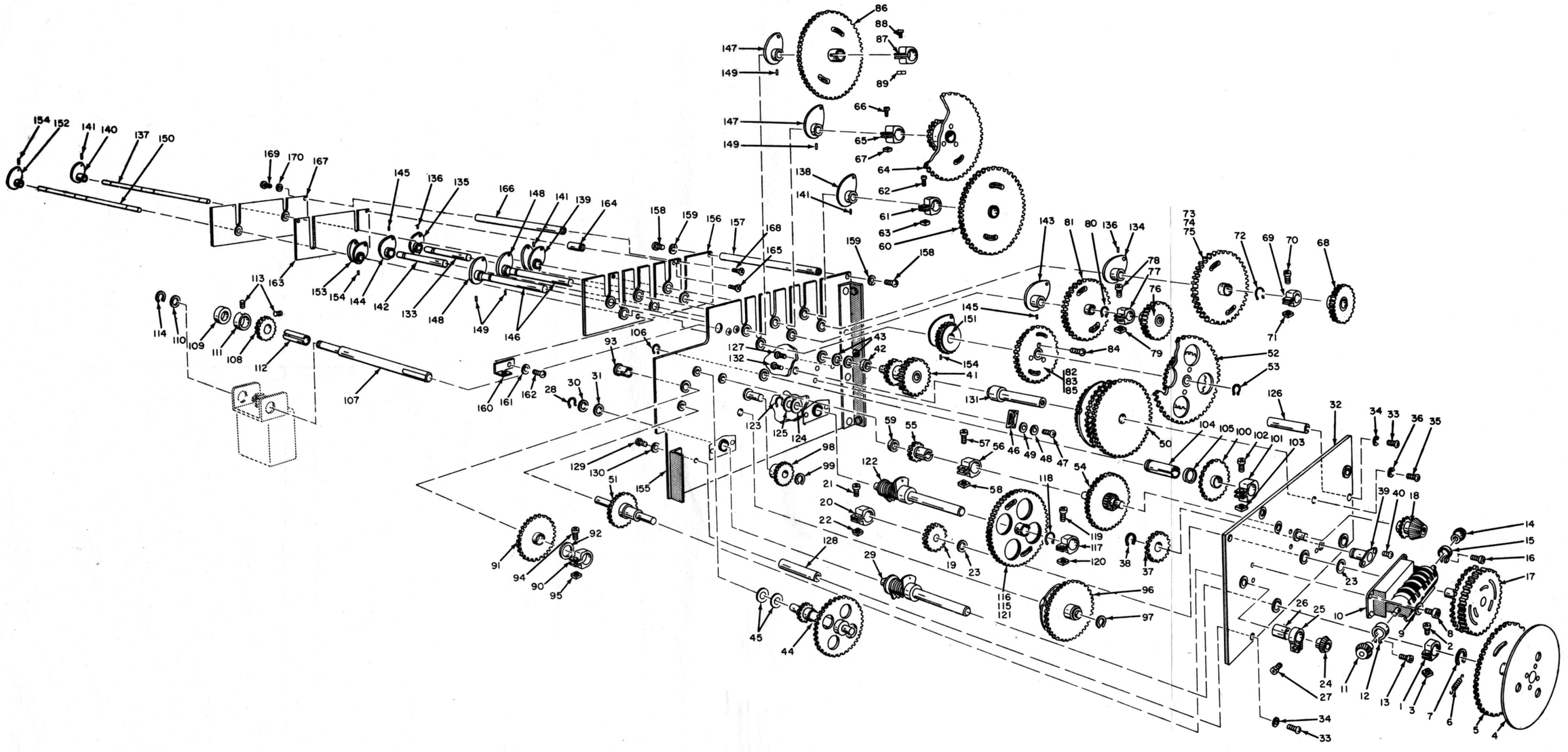

Figure 84. Rf gear train assembly, exploded view.

retaining ring (80), and No. 2 gear assembly (81) by loosening screw (78) and removing retaining ring (80).

(28) Remove the 8- to 16-mc gear (82), the 8- to 16-mc loading gear (83) by removing the three 4-40 by ¼-inch machine screws (84) and two gear rack springs (85).

(29) Remove the loaded rack gear assembly (86), by loosening the .312-inch hole gear clamp (87), 4-40 by ½-inch socket-head screw (88), and 4-40 square nut (89).

(30) Loosen and remove the gear clamp (90), oscillator spur gear (91), 5/16-inch flat washer (92), and oscillator dial hub (93), by loosening the 4-40 by 9/16-inch socket-head screw (94) and 4-40 square nut (95).

(31) Remove the switch gear assembly (96) by removing the screw at the rear of the riveted front gear plate assembly (155).

Caution: To disassemble the switch gear assembly (96), remove retaining ring (97). Do not lose the 3/16-inch ball bearing. Observe the positioning of the parts (fig. 87). The remainder of 96 is removed by removing the screw at the rear of the riveted front gear plate assembly (155).

(32) Remove the locking gear (98) by first removing the ⅛-inch E-type retaining ring (99).

(33) Remove the idler gear (100) by loosening the .312-inch hole gear clamp (101), 4-40 by ½-inch socket-head screw (102), 4-40 square nut (103), shaft sleeve (104), gear bushing (105), and ¼-inch retaining ring (106).

(34) Remove the trimmer shaft (107), helical driven gear (108), helical gear bushing (109), special washer (110), helical gear clamp (111), and shaft insulator (112) by loosening two 8/36 by ⅛-inch set screws (113) and removing the 3/16-inch retaining ring (114).

(35) Remove the megacycle gear (115) and the soldered megacycle gear (116) by loosening the gear clamp (117). To separate items 115 and 116, remove the retaining ring (118). The 4-40 by 9/16-inch socket-head screw (119) and 4-40 square nut (120) secure the gear clamp (117). To separate items (115) and (116), remove the two multiturn gear springs (121).

(36) Remove the rf stop assembly (122) by removing retaining ring (123) and washers (124) and (125).

(37) Remove the two gear panel spacing posts (126) by removing their 8-32 by 5/16-inch flat head machine screws (127).

(38) Remove the four panel spacing posts (128) by removing eight 8-32 by ⅜-inch machine screws (129) and eight No. 8 split lock washers (130).

(39) Remove the differential shaft (131) by removing the 8-32 by 5/16-inch flat-head machine screw (132).

(40) Remove the .5- to 1-mc camshaft assembly that consists of the camshaft (133), soldered rf cam (134), soldered rf cam (135), and two No. 6/0 taper pins (136). This is done by removing the taper pins (136).

(41) The 1- to 2-mc camshaft assembly consists of the 1- to 2-mc camshaft (137), soldered rf cam (138), 1- to 2-mc soldered rf cam (139), and soldered rf cam (140). Disassemble by removing three No. 6/0 taper pins (141).

(42) The 2- to 4-mc camshaft assembly consisting of camshaft (142), soldered rf cam (143), and soldered rf cam (144) can be disassembled by removing the two No. 6/0 taper pins (145).

(43) The 4- to 8-mc camshaft assembly and the 16- to 32-mc camshaft assembly are identical; each consists of camshafts (146), soldered rf cams (147), and soldered rf cams (148). They can be taken apart by removing the two No. 6/0 taper pins (149) from each.

(44) The 8- to 16-mc camshaft assembly consists of the shaft (150), pressed gear assembly (151), soldered rf cam (152), and soldered rf cam (153). Disassemble by removing three No. 6/0 taper pins (154).

(45) The riveted front gear plate (155) and the pressed cam plate (156) are fastened together by four posts (157), eight 6-32 by 3/8-inch machine screws (158), and eight No. 6 split lock washers (159). In addition, two cam plate brackets (160) are fastened to the pressed cam plate (156) with two 6-32 by 7/16-inch machine screws (161) and two No. 6 split lock washers (162).

(46) The pressed auxiliary cam plate (163) is fastened to the pressed cam plate (156) with four short posts (164) and eight 6-32 by 3/8-inch flat head machine screws (165).

(47) Two long posts (166) separate the pressed rear plate (167) and the riveted front gear plate (155) with two 6-32 by 3/8-inch flat head machine screws (168), two 6-32 by 3/8-inch machine screws (169), and two No. 6 split lock washers (170).

c. Reassembly. Reassemble the rf gear train assembly in the reverse order of disassembly. The reverse order of the index numbers in figure 84 should be used as a guide. During and after reassembly the mechanical and electrical synchronization of the rf gear train assembly must be followed (par. 138). Each step of the disassembly procedure (par. 131*b*) contains an item, or items, removed, and the attaching parts, such as screws, retaining rings, etc. Collect the parts for each step, and reassemble in a systematic manner.

132. Rf Gear Train Assembly Parts Legend

Index No.	*Reference symbol*	*Description*
1	O 207	Gear clamp
2	H218	4-40 by 9/16-inch socket-head screw
3	H219	4-40 square nut
4	A 216	Riveted locking plate
5	O 323	Spur gear
6	O 322	Rack gear springs
7	H213	7/16-inch retaining ring
8	H227	4-40 by 5/16-inch machine screws
9	H202	No. 4 split lock washers
10	M201	Mechanical counter
11	O 202	Bevel gear
12	H231	Gear clamp
13	H217	3/56 by 1/4-inch socket-head screw
14	O 212	Bevel gear
15	H231	Gear clamp
16	H217	3/56 by 1/4-inch socket-head screw
17	O 295	Locked clutch gear assembly
18	O 296	Pressed bevel gear
19	O 245	Spur gear
20	H233	.312-inch hole gear clamp
21	H215	4-40 by 1/2-inch socket-head screw
22	H219	4-40 square nut
23	H251	Washers
24	O 213	Bevel gear
25	H231	Gear clamp
26	O 221	Gear bushing
27	H217	4-40 by 9/16-inch socket-head screw
28	H224	1/4-inch retaining ring
29	O 316	Pinned stop assembly
30	H251	Washer
31	H253	Washer
32	A 201	Pressed auxiliary gear plate assembly
33	H230	8-32 by 3/8-inch binder-head screws
34	H201	No. 8 split lock washers
35	H240	Special screw
36	H212	No. 5 split lock washer
37	O 253	Pressed gear
38	H222	1/4-inch type E retaining ring
39	O 252	Staked gear post
40	H228	6-32 by 3/16-inch machine screws
41	O 261	Pinned gear assembly
42	O 222	Gear bushing
43	H254	Washers
44	O 246	Pinned gear assembly
45	H254	Washers
46	O 244	Detent spring
47	H216	6-32 by 1/4-inch binder head screws
48	H203	No. 6 split lock washers
49	H213	No. 6 flat washers
50	O 219	Final differential gear assembly
51	O 283	Pinned gear
52	O 205	No. 8 riveted gear
53	H224	1/4-inch retaining ring
54	O 390	Pinned spur gear
55	O 243	Spur gear
56	H233	.312-inch hole gear clamp
57	H215	4-40 by 1/2-inch socket-head screw
58	H219	4-40 square nut
59	O 223	Gear bushing
60a		Loaded rack gear assembly
61	H233	.312-inch hole gear clamp
62	H215	4-40 by 1/2-inch socket-head screw
63	H219	4-40 square nut
64b		Gear assembly No. 4

Index No.	Reference symbol	Description
65	H233	.312-inch hole gear clamp
66	H215	4-40 by 1/2-inch socket-head screw
67	H219	4-40 square nut
68	O 201	Soldered rack gear
69	O 208	Gear clamp
70	H218	4-40 by 9/16-inch socket-head screw
71	H219	4-40 square nut
72	H234	Retaining ring
73	O 392	Soldered gear
74	O 254	Spur gear
75	O 325	Gear rack springs
76	O 363	Soldered rack gear
77	O 209	Gear clamp
78	H218	4-40 by 9/16-inch socket-head screw
79	H219	4-40 square nut
80	H234	Retaining ring
81c		No. 2 gear assembly
82	O 328	8- to 16-mc gear
83	O 324	8- to 16-mc loading gear
84	H241	4-40 by 1/4-inch machine screws
85	O 273	Gear rack springs
86a		Loaded rack gear assembly
87	H233	.312-inch hole gear clamp
88	H215	4-40 by 1/2-inch socket-head screw
89	H219	4-40 square nut
90	O 210	Gear clamp
91	O 241	Oscillator spur gear
92	H214	5/16-inch flat washer
93	O 240	Oscillator dial hub
94	H218	4-40 by 9/16-inch socket-head screw
95	H219	4-40 square nut
96	O 307	Switch gear assembly
97	H237	Retaining ring
98	O 203	Locking gear
99	H221	E-type 1/8-inch retaining ring
100	O 204	Idler gear
101	H233	.312-inch hole gear clamp
102	H215	4-40 by 1/2-inch socket-head screw
103	H219	4-40 square nut
104	O 215	Shaft sleeve
105	O 242	Gear bushing
106	H224	1/4-inch retaining ring
107	O 236	Trimmer shaft
108	O 318	Helical driven gear
109	O 256	Helical gear bushing
110	H232	Special washer
111	H245	Helical gear clamp
112	E227	Vfo shaft insulator
113	H220	8/32 by 1/8-inch set screws
114	H223	3/16-inch retaining ring
115	O 218	Megacycle gear
116	O 321	Soldered megacycle gear
117	O 211	Gear clamp
118	H213	7/16-inch retaining ring
119	H218	4-40 by 9/16-inch socket-head screw
120	H219	4-40 square nut
121	O 319	Multiturn gear springs
122	O 317	Rf stop assembly
123	H234	Retaining ring
124	H251	Washers
125	H253	Washers
126	H236	Gear panel spacing posts
127	H226	8-32 by 5/16-inch flat-head machine screws
128	H235	Panel spacing posts
129	H230	8-32 by 3/8-inch machine screws
130	H201	No. 8 split lock washers
131	O 206	Differential shaft
132	H226	8-32 by 5/16-inch flat-head machine screw
133	O 311	Camshaft
134	O 311	Soldered rf cam
135	O 311	Soldered rf cam
136	O 311	No. 6/0 taper pins
137	O 312	1- to 2-mc camshaft
138	O 312	Soldered rear cam
139	O 312	1- to 2-mc soldered rf cam
140	O 312	Soldered rf cam
141	O 312	No. 6/0 taper pins
142	O 313	Camshaft
143	O 313	Soldered rf cam
144	O 313	Soldered rf cam
145	O 313	No. 6/0 taper pins
146	O 314	Camshafts
147	O 314	Soldered rf cams
148	O 314	Soldered rf cams
149	O 314	No. 6/0 taper pins
150	O 315	Shaft
151	O 315	Pressed gear assembly
152	O 315	Soldered rf cam
153	O 315	Soldered rf cam
154	O 315	Taper pins
155	A 202	Riveted front gear plate
156	A 209	Pressed cam plate
157	H244	Posts
158	H229	6-32 by 3/8-inch machine screws
159	H203	No. 6 split lock washers
160	A 206	Cam plate brackets
161	H255	6-32 by 7/16-inch machine screws
162	H203	No. 6 split lock washers
163	O 306	Pressed auxiliary cam plate
164	H242	Short posts
165	H225	6-32 by 3/8-inch flat head machine screws
166	H243	Long posts
167	A 208	Pressed rear plate
168	H225	6-32 by 3/8-inch flat-head machine screws
169	H229	6-32 by 3/8-inch machine screws
170	H203	No. 6 split lock washers

aIndex No. 60 consists of H234, O 262, O 264, and O 247.

bIndex No. 64 consists of O 253, O 273, O 274, and O 324.

cIndex No. 81 consists of O 270, O 271, O 259, and H234.

Note In items 133 through 154, reference symbols are for entire camshaft assembly.

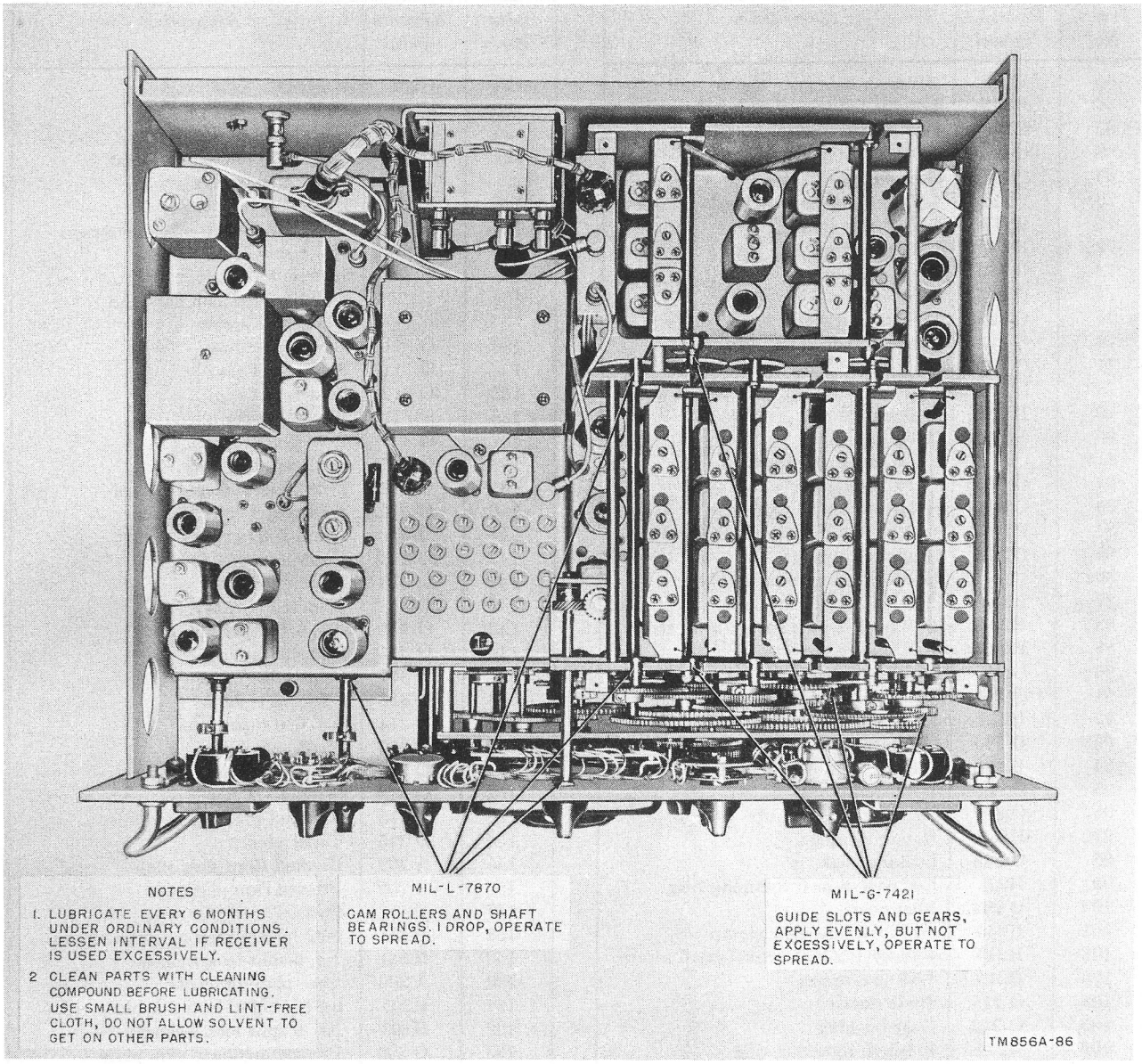

Figure 85. Radio Receiver R-390A/URR, Lubrication points.

133. Lubrication of Mechanical Tuning System

The only parts of the receiver that require lubrication are the mechanical tuning system, which includes the rf gear train assembly and cam racks, and the BFO PITCH control shaft bearing. The receiver is lubricated at the factory and should be lubricated every 6 months thereafter. If inspection indicates the need for more frequent lubrication, or if the receiver is used under abnormal conditions, shorten the lubrication interval accordingly. When the receiver is used in a hot, dry climate, the bearings may require lubrication at least every 3 months. Overlubrication sometimes causes more trouble than a lack of lubrication and should be avoided. Check the condition of the mechanical tuning system every time the receiver is withdrawn from its cabinet or case. Turn the MEGACYCLE CHANGE and the KILOCYCLE CHANGE controls throughout their ranges, and observe the

operation of all the gears, cams and shafts, bearings and guide slots. Look for grit, sand, and dust in the moving parts; if any are present, clean and relubricate the parts. Check the operation of the BFO PITCH control. If it does not operate freely, check the lubrication of the control shaft bearing.

Caution: Do not attempt to lubricate the sealed tuning unit of the vfo subchassis. Unstable operation of the oscillator may result.

a. Cleaning Prior to Lubrication. Remove the top and bottom covers of the receiver. Use a clean, thin, long-handled brush with medium bristles, dipped in Cleaning Compound. Remove the dirt, grit, sand, grease, and oil from the gears, cams, guide slots, shafts, and bearings. Rotate the MEGACYCLE CHANGE and the KILOCYCLE CHANGE knobs to reach all the parts. Remove excess Cleaning Compound from the brush so that none is dropped on wires and cables. Use a clean, lint-free cloth moistened with Cleaning Compound for removing dirt, oil, and grease from the larger parts of the receiver, such as chassis and castings. Thoroughly dry all parts with a clean lint-free cloth before applying the lubricant.

b. Detailed Lubrication Instructions. Lubricate the gears, cams, bearings, slug racks, and guide slots as indicated in figure 85. To distribute individual drops of oil to the bearings, dip a short length of bare wire into the oil and touch the end of the wire to the bearing. This method will prevent the application of too much lubricant. A small hand-operated grease gun and a clean thin brush can be used for depositing grease to the gear teeth, cam edges, and guide slots. Operate the MEGACYCLE CHANGE and KILOCYCLE CHANGE knobs while performing the lubrication to expose all parts and to spread the lubricant to all gear teeth and wearing surfaces.

134. Refinishing

Instructions for refinishing marred panels or a cabinet exterior are contained in TM 9-2851, Painting Instructions for Field Use. Use paint No. 2610 semigloss gray enamel (Federal specification TT-C-595) for the front panel. After extensive use of the receiver, the paint on the knobs may wear off. The knobs can be restored to a new condition by painting them with a dull, black paint. Knobs with a white index line can be restored by cleaning off the old white index line, and then filling the index groove with fresh, white paint. The excess paint should be wiped off with a clean cloth. When a front-panel marking has been worn off, use a fine brush and white enamel to replace the marking.

Section IV. ALIGNMENT AND ADJUSTMENT PROCEDURES

135. Test Equipment and Tools Required for Alignment and Adjustment

a. Test Equipment. The test equipment required for alignment and adjustment is listed below. A common usage name is given after each component.

Nomenclature	*Common name*
RF Signal Generator Set AN/URM-25 with Accessory Kit MK-288/URM	Signal Generator
Electronic Multimeter TS-505/U	Vtvm
Multimeter TS-352/U	Multimeter
Electronic Multimeter ME-30A/U	Ac vtvm

b. Tools. Use the fluted Bristo wrench, mounted on the rear panel of the receiver, for adjusting the antenna, rf, and variable if cores. Use the same tool for adjusting the tuning shafts during mechanical synchronization. Use a nonmetallic screw driver for adjusting the various trimmer capacitors. Use a hexagonal, nonmetallic tool for adjusting the cores in T501, T502, T503, and Z503 on the if subchassis. This tool must be inserted through the top core into the bottom core; the bottom core will turn without disturbing the setting of the top core. This type of adjustment is to be made only after the particular coil or transformer is replaced.

c. Other Equipment. A 600-ohm and a 50-ohm resistor are required. They should be noninductive and should be 1 watt or larger.

136. Standard Test Conditions

Unless specified otherwise, conduct all alignment and test procedures under the following conditions:

a. Temperature—normal room or shelter.

b. Humidity—normal room or shelter.

c. Line voltage and frequency—115 volts ac ±1 per cent at 60 cps.

d. Warm-up period—at least 5 minutes.

e. Dummy antenna—balanced: Electrical Dummy Load DA-121/U (part of Accessory Kit MK-288/URR).

f. Standard modulation—30 per cent am at 400 cps.

g. Audio load impedance—600 ohms, nonreactive.

137. Preliminary Checks

Before aligning the receiver and applying power, check the following items and perform the instructions:

a. All the controls should operate freely and the knobs should be securely attached to their shafts.

b. The AC 3 AMP fuse F101 on the rear panel should be good and be a 3-ampere type when the OVENS switch is to be turned to ON. Use a 2-ampere fuse if the OVENS switch is to be left in the OFF position. Use a 1½-ampere fuse if 230 volts ac is used to power the receiver with the OVENS switch at ON. Use a 1-ampere fuse with the OVENS switch at OFF.

c. Tubes and tube shields should be securely in place.

d. All connectors should be seated firmly.

e. Jumpers should be connected between terminals 1 and 2, 3 and 4, 11 and 12, and 14 and 15 on the rear panel of the receiver.

f. The KILOCYCLE CHANGE dial overtravel should be not less than 25 kc at each end.

g. The resistance between terminals 3 and 5 on the rear panel terminal board should measure low with the positive ohmmeter lead on terminal 5 and high with it on terminal 3.

h. Ground the receiver, apply ac power, and set the front-panel controls as instructed in paragraph 85.

i. Check B+ voltage between +150 V test point E607, on the left side of the receiver, and chassis ground. It should be between +148 volts and +153 volts.

j. Check to see that all tube filaments are lighted.

k. Check to see that the CARRIER LEVEL and LINE LEVEL meters are illuminated.

l. Check to see that the antenna relay is actuated when the FUNCTION switch is placed in the STAND BY and CAL positions.

m. Set the BREAK IN switch to the ON position, and momentarily ground the BRK IN terminal, terminal 9 on the rear panel of the receiver. This should actuate the antenna relay and short out the audio output when the FUNCTION switch is in the AGC or MGC position.

n. Set the FUNCTION switch to AGC and the RF GAIN control fully counterclosewise. Adjust CARR-METER ADJ control R523 (fig. 64) on the af subchassis for a 0 reading on the CARRIER LEVEL meter.

138. Mechanical and Electrical Synchronization

(fig. 86 through 89)

The receiver tuning elements, consisting of the frequency-indicating counter, KILOCYCLE CHANGE and MEGACYCLE CHANGE stops, the six-position rf band switch, the second crystal-oscillator band switch, and the vfo, must be in synchronization with the rf gear train before attempting electrical alignment. Nonsynchronization of the tuning shafts and rf gear train is likely to occur as a result of the removal and replacement of the rf subchassis, crystal-oscillator subchassis, vfo subchassis, or disassembly of part or all of the rf gear train assembly. Check and adjust the following items as may be necessary:

a. Camshafts. The camshafts are synchronized properly if the index lines on the pressed cam plate line up with the holes in the cams, and if the intermittent switch drive gears are as shown (fig. 87) when the frequency indicator reads exactly 07 +000. If the cams line up at some other frequency indication, line the cams up to the index lines with the KILOCYCLE CHANGE control, loosen the bevel gear on the counter (fig. 86), and adjust it to 07 +000. To synchronize the rf subchassis when it is removed from the main frame, turn the KILOCYCLE CHANGE drive shaft by rotating the

riveted locking plate (fig. 86) until the counter reads 07 +000. If the index lines do not bisect the holes as specified, follow the instructions in (2) and (3) below. All camshafts, except the 8- to 16-mc camshaft, are secured to the drive gears. To position a camshaft, loosen the clamp that is located at the end of the individual shaft in front of the subchassis. To avoid losing the nut, do not loosen the clamp more than is necessary. Be careful not to strip the screw thread.

(1) Check the 10-turn stops by rotating the MEGACYCLE CHANGE and KILOCYCLE CHANGE shafts fully counterclockwise. The frequency indicator should read halfway between 99 and 00 mc (off detent position) and between —963 and —972 kc. Check the reading on the crystal-oscillator subchassis band switch indicator position. If it does not agree with the setting of 00, loosen the clamp on the crystal-oscillator subchassis drive shaft, and turn the shaft by hand for the crystal-oscillator drive shaft setting of 0. Tighten the shaft coupler after the adjustment is made.

(2) Check the cam followers at the high and low ends of each coil range. In general, all cam followers should be near the peak of the cams at the high end of the coil ranges. Specifically, all cams, except the cams for the .5- to 1-mc range, should not quite reach the peak of the cams at the high end of the range. The cam followers for the .5- to 1-mc range may pass over the peak of the cams for a KILOCYCLE CHANGE control reading of +025 or higher. All cam followers, except the .5- to 1-mc cam followers, should not quite reach the valley of the cams as the KILOCYCLE CHANGE control is turned to the low end of the coil ranges. For the .5- to 1-mc cam followers, they may pass through the valley and start up the other side of the cams as the KILOCYCLE CHANGE control is adjusted to a reading of about 475. The cam follower on first variable if Z213 (17.5 to 25 mc) is near the valley of the cam when the KILOCYCLE CHANGE control reading is 500, and rises to near the peak at 07 +000. The cam follower on second variable if Z216 (3 to 2 mc) is near the valley of the cam when the KILOCYCLE CHANGE control is rotated fully clockwise and near the peak when the KILOCYCLE CHANGE control is fully counterclockwise.

(3) If the cams do not line up as shown in figure 87, loosen the shaft clamps and adjust the cams in the following order: 8- to 16-mc cams (the first variable if cams are also on this shaft), 16- to 32-mc cams, 4- to 8-mc cams, 2- to 4-mc cams, 1- to 2-mc cams (the second variable if cams are also on this shaft), and the .5- to 1-mc cams.

Note. The cams and camshafts can be identified by the tuning range indicated on antenna and if transformers, which are tuned by their respective slug racks (fig. 56).

b. Six-position Rf Band Switch. The procedure for checking and adjusting the six-position rf band switch is as follows:

(1) With the frequency indicator still reading 07 +000, observe the intermittent gear and its small mating gear. They should be as shown in figure 87. Remove tube V207 from its tube socket, and disconnect J208 from P108. Connect an ohmmeter between pin 6 of XV207 and pin D of J208. The ohmmeter should read approximately 56,000 ohms. As the MEGACYCLE CHANGE control is turned from 07 to 08, the reading on the ohmmeter should become infinity, indicating that the rf band switches are selecting the correct coils.

(2) Rotate the MEGACYCLE CHANGE control through all of the bands. On those bands from 00 through 07, the ohmmeter should read approximately 56,000 ohms; the reading should be infinity from 08 through 31. After the test is completed, remove the ohmmeter connections, reconnect J208 to P108, and replace tube V207.

(3) If the rf band switch contacts are believed to be out of synchronization, turn the MEGACYCLE CHANGE con-

trol shaft fully counterclockwise; then turn it clockwise through seven detent positions (count them), and stop the shaft exactly on the eighth detent position.

(4) Remove the rf subchassis (par. 123).

(5) Loosen the rf band switch clamp (fig. 88) and turn the shaft by hand until the rotors on the rf switches are centered on the 4- to 8-mc switch position contacts. Tighten the clamp after adjustment. Correct positioning of the rf band switch can be determined as in (1) and (2) above.

(6) Check the rf band switch overtravel as follows: as the MEGACYCLE CHANGE control shaft is turned through the detent position which switches the 4- to 8-mc contacts, the switch rotor contacts have a tendency to *follow* the rotary motion slightly as the MEGACYCLE CHANGE shaft is continued through its rotation. This condition is permissible if the contact overtravel is the same amount for both directions of rotation of the MEGACYCLE CHANGE shaft. Check this condition by turning the MEGACYCLE CHANGE shaft both clockwise and counterclockwise through the detent position which connects the 4- to 8-mc contacts. If the overtravel is not as specified, adjust as follows:

(*a*) Turn the MEGACYCLE CHANGE shaft off the detent in the direction of the excessive overtravel.

(*b*) Loosen the gear clamp on the small gear which drives the intermittent rf band switch gear.

(*c*) Hold the intermittent gear to prevent it from turning, and return the MEGACYCLE CHANGE shaft back into the same detent.

(*d*) Tighten the gear clamp on the small gear. Recheck the overtravel and continue the adjustments until the overtravel is the same in both directions.

c. Second Crystal Oscillator Band Switch. The second crystal oscillator band switch should be checked and synchronized as follows:

(1) The second crystal oscillator band switch is synchronized correctly when the reading on the indicator wheel agrees with the reading on the first two digits of the frequency indicator.

Note. Only even numbers appear on the indicator wheel. Odd numbers appear as straight lines between even numbers.

(2) If the indication is incorrect, loosen the shaft coupler on the second crystal oscillator band switch and turn it to the correct number with the aid of a long screw driver through the SYNC XTAL OSC hole at the rear of the receiver.

d. Vfo Tuning Shaft. Synchronize the vfo tuning shaft as follows:

(1) Turn on the receiver and allow it to warm up for at least 5 minutes.

(2) Disconnect coaxial plug P717 (fig. 56) and reconnect it with an extension coaxial cable. Feed the signal from the vfo to the rf input of a frequency standard, or the UNBALANCED ANTENNA jack on another Radio Receiver R-390A/URR which is properly calibrated. Turn the BFO switch on the number two receiver to ON, turn the BFO PITCH to 0, and tune it between 2 and 4 mc until the signal from the vfo subchassis under test is heard. Note the frequency of the second receiver.

(3) Remove the antibacklash spring on the vfo shaft Oldham coupler (fig. 89), and loosen the shaft clamp nearest the front panel of receiver number one.

(4) Tune the receiver number one KILOCYCLE CHANGE shaft so that the last three number wheels on the counter read exactly 000.

(5) Once again locate the output of the vfo on the second receiver, and tune this receiver a few kc in the direction of 3.455 mc. Turn the vfo shaft so the output signal can be heard on the second receiver. Once again tune the

second receiver a few kc nearer 3.455 mc, and turn the vfo shaft to make its signal heard on the second receiver.

(6) Once the correct direction of rotation of the vfo shaft has been established, tune the second receiver to precisely 3.455 mc, and turn the vfo shaft until the 3.455-mc signal from the vfo is set at zero beat with the second receiver.

Caution: The vfo will be permanently damaged if the shaft is turned too far in either direction. The end of the vfo shaft travel can be felt while turning the shaft with the fingers. Do not force the shaft, or damage will result.

(7) Tighten the clamp on the vfo shaft and replace the antibacklash spring.

(8) Disconnect the extension coaxial cable cord from P717, and reconnect P717 to J217.

(9) Set the FUNCTION switch on the receiver under test to CAL, turn the BFO switch to ON, and the BFO PITCH control to 0. Connect a headset or a loudspeaker to the receiver.

(10) With the first two digits of the frequency indicator set to any position, check the receiver calibration on each of the 100-kc calibration markers.

(11) The receiver should be checked against a frequency-checking signal, such as that from WWV, or any local broadcast station of known frequency.

139. Adjusting the ZERO ADJ Control

Perform the operational check and adjustment of the ZERO ADJ control as follows:

a. Turn the ZERO ADJ knob fully counterclockwise. Carefully and slowly turn the knob clockwise, and observe the free play in the knob. The free play should be approximately ⅛ turn.

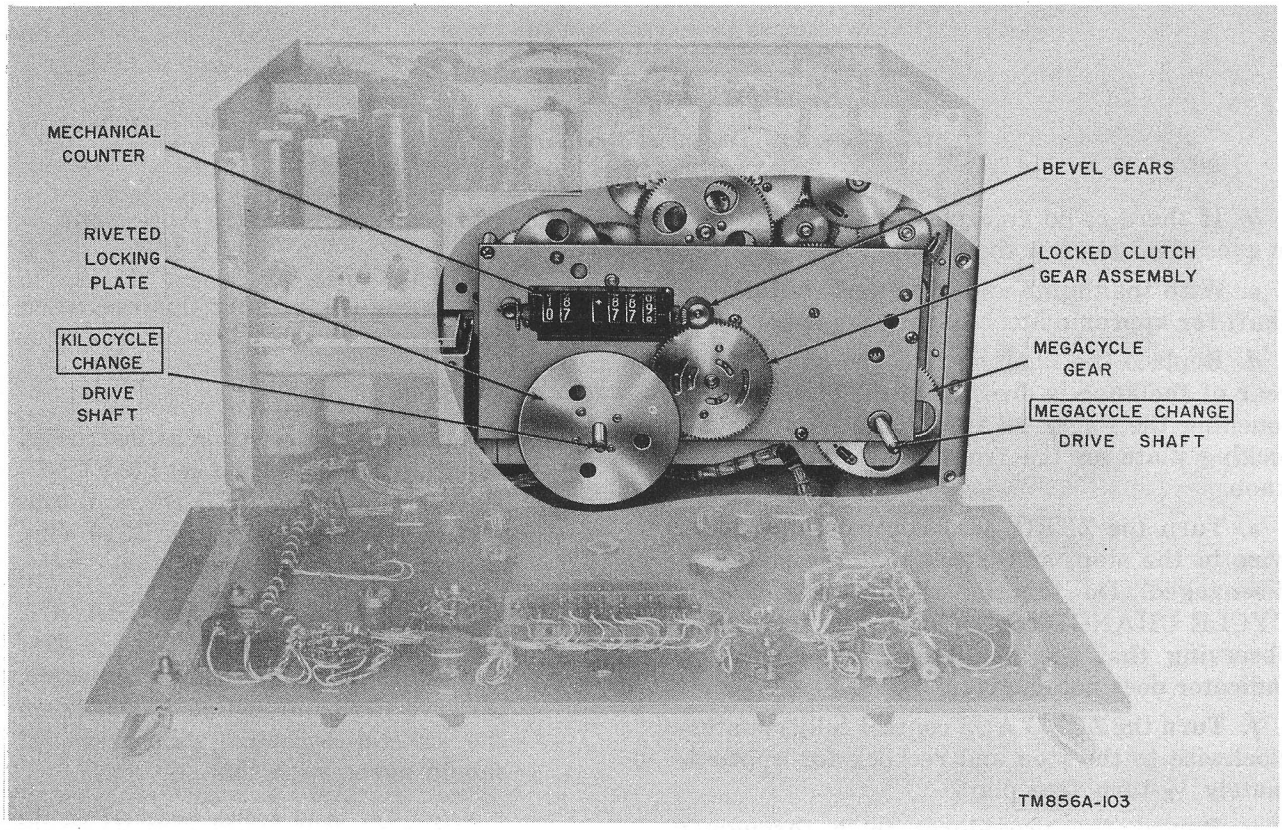

Figure 86. Rf gear train assembly, location of parts.

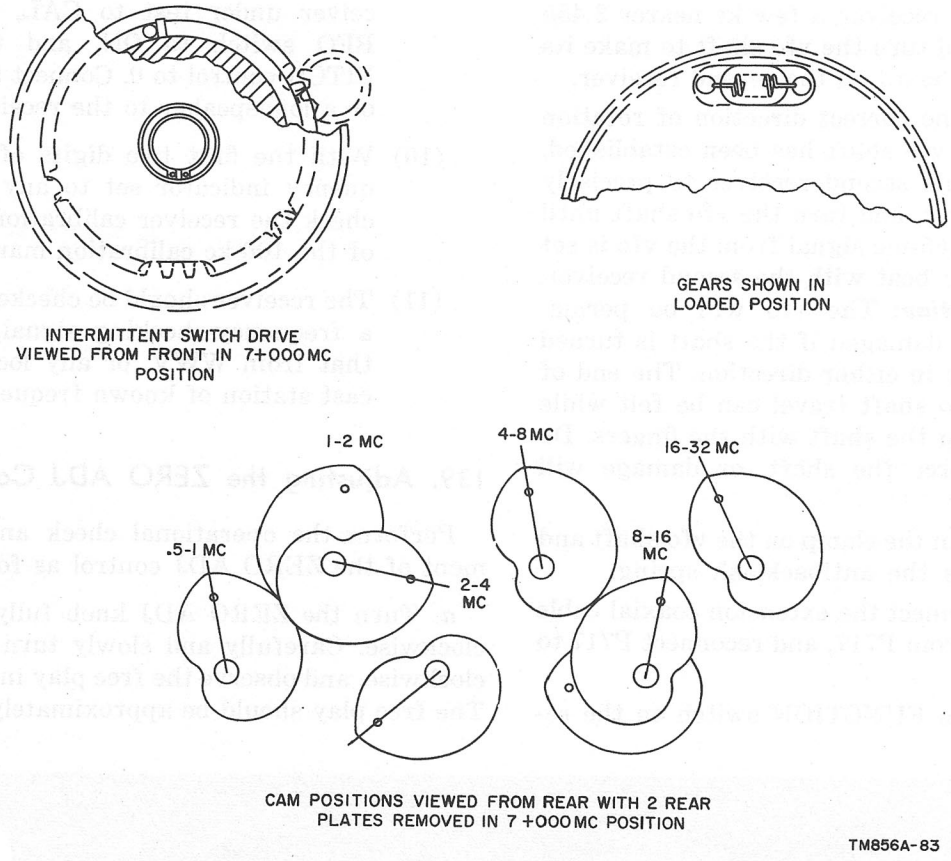

Figure 87. Mechanical alignment details.

b. If there is no free play, or the free play is excessive, remove the knob.

c. With the thumb and forefinger, adjust the shaft for approximately ⅛-turn free play.

d. Replace the knob so that the stop on the rear of the knob is directly to the right of and touching the finger on the ZERO ADJ control locking plate on the front panel. Tighten the knob.

e. Turn the ZERO ADJ control fully clockwise to the stop, and check that the clutch is disengaged. Do this by rocking the KILOCYCLE CHANGE control back and forth, and observing that the reading of the frequency indicator does not change.

f. Turn the ZERO ADJ control fully counterclockwise to the stop and recheck for approximately ⅛-turn free play.

g. Repeat the procedures in *b* through *f* above if the free play and clutch disengagement is not as specified.

140. Crystal-oscillator Switch Alignment (fig. 90)

Two methods for performing this operation are given below.

a. First Method.

(1) Set the receiver controls as instructed in paragraph 85, except set the FUNCTION switch to STAND BY, and connect a vtvm to test point E210 (fig. 58) on the rf subchassis.

(2) Set the MEGACYCLE CHANGE control for a reading of 07 on the first two digits of the frequency indicator. Observe the band switch indicator on the crystal-oscillator subchassis. If should agree with this setting.

Note. The band switch indicator on the crystal-oscillator subchassis registers the even-numbered bands. Band 7 is the white line halfway between bands 6 and 8.

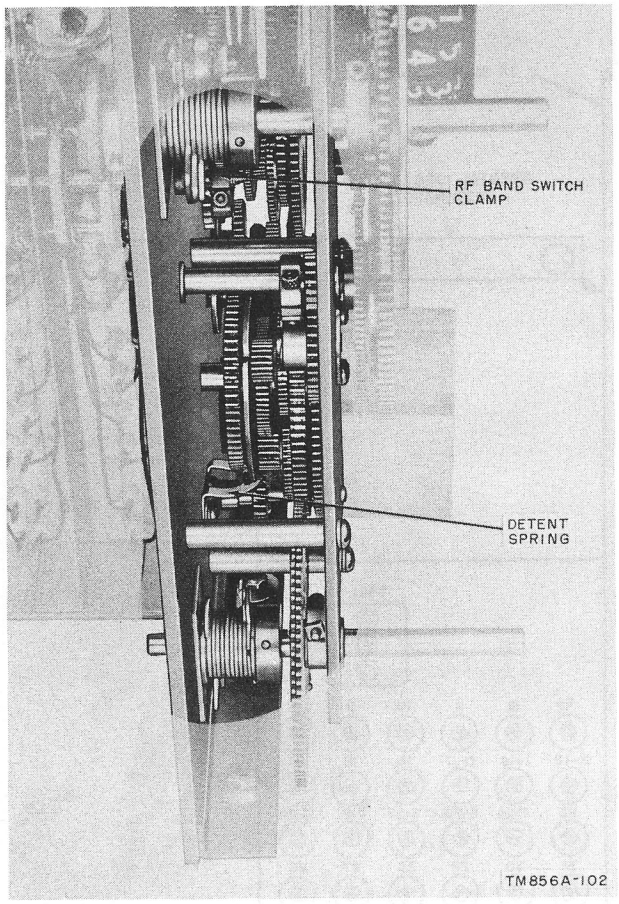

Figure 88. Location of rf band switch shaft clamp and detent spring.

(3) Rock the MEGACYCLE CHANGE control back and forth over the detent, and observe the reading on the vtvm. The reading on the vtvm should be between —3.5 and —8 volts when the MEGACYCLE CHANGE control is on the detent. The crystal-oscillator band switch should be centered with respect to the detent position.

(4) If adjustment is necessary, loosen the shaft clamp on the crystal-oscillator band switch shaft, and adjust the shaft with a long screw driver through the SYNC XTAL OSC hole on the rear panel of the receiver (fig. 12).

(5) Set the MEGACYCLE CHANGE control to each of the bands from 08 to 31 (first two digits of the frequency indicator) and adjust the corresponding trimmer on the crystal-oscillator subchassis for maximum output (fig. 90), as observed on the vtvm.

(6) Check only for output voltage on bands 00 through 07. There are no adjustments for 00 through 07. The numbers on the trimmers that correspond to 00 through 07 only indicate that the same trimmers are used on the higher frequency bands thus indicated.

b. Second Method.

(1) Set the receiver controls as instructed in paragraph 85, except set the FUNCTION switch to CAL, the BFO switch to ON, and the BFO PITCH control to 0.

(2) Set the MEGACYCLE CHANGE control for a reading of 07 on the first two digits of the frequency indicator. Observe the band indicator on the crystal-oscillator subchassis. It should agree with this setting.

(3) If adjustment is necessary, loosen the shaft clamp on the crystal-oscillator subchassis band switch, and adjust the shaft with a long screw driver through the SYNC XTAL OSC hole at the rear panel of the receiver (fig. 12).

(4) Rock the MEGACYCLE CHANGE control back and forth over the detent, and listen for the calibration oscillator signal. The calibration oscillator sig-

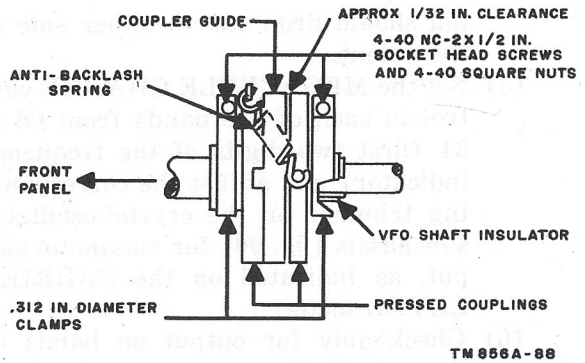

Figure 89. Oldham coupler details.

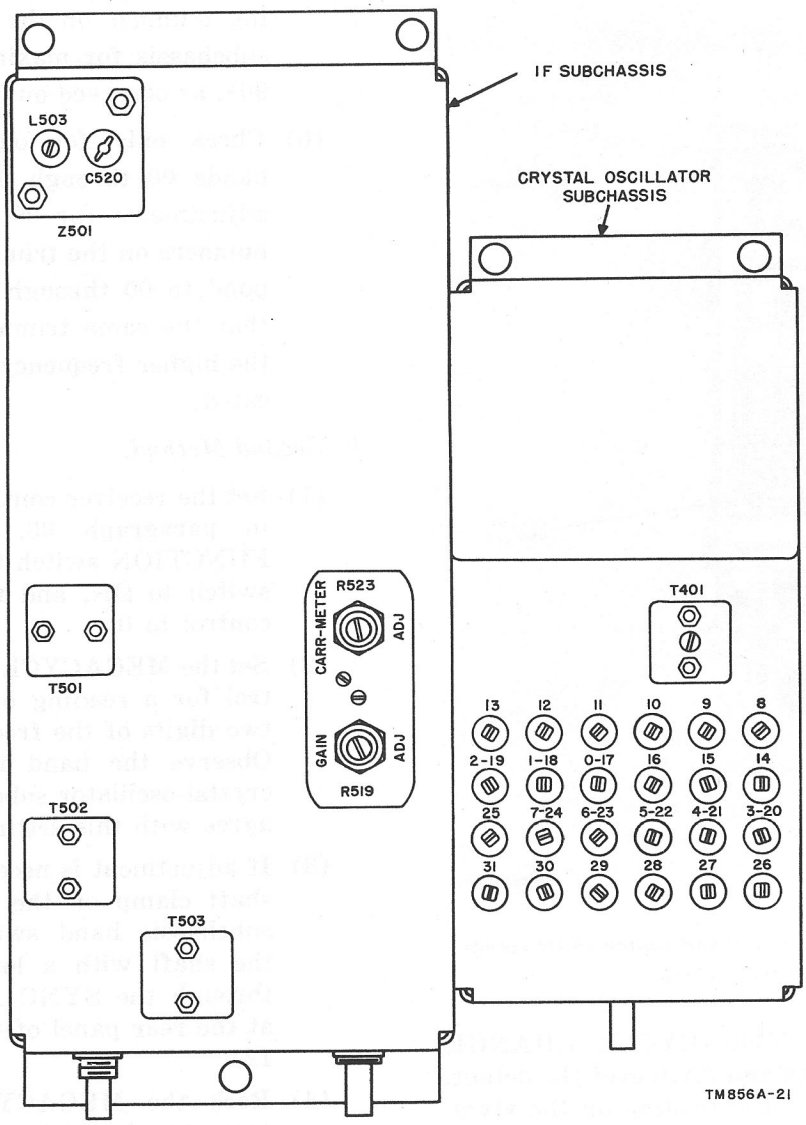

Figure 90. Crystal-oscillator and if subchassis alignment points.

nal should drop out on either side of the detent.

(5) Set the MEGACYCLE CHANGE control to each of the bands from 08 to 31 (first two digits of the frequency indicator) and adjust the corresponding trimmer on the crystal-oscillator subchassis (fig. 90) for maximum output, as indicated on the CARRIER LEVEL meter.

(6) Check only for output on bands 00 through 07. There are no adjustments for these bands (*a*(6) above).

141. Beat-frequency Oscillator Alignment

Two methods for aligning the bfo are given below.

a. First Method.

(1) Set the receiver controls as instructed in paragraph 85, except set the FUNCTION switch to MGC and connect a vtvm to the DIODE LOAD terminal 14 GND terminal 16 on the rear panel of the receiver.

(2) Set the BANDWIDTH control to .1 KC and feed a strong 455-kc signal

with the signal generator into the grid of V204 through test point E211 (fig. 58) on the top of the rf subchassis.

(3) Adjust the signal generator frequency for maximum diode load voltage. This adjusts the signal generator to the exact resonant frequency of the crystal filter.

(4) Turn the BFO switch to ON, and adjust the BFO PITCH control for zero beat, as indicated by a slow oscillation of the needle on the dc vtvm. If zero beat does not occur at 0 on the front panel, loosen the BFO PITCH knob, and reset it to zero. It may be necessary to remove the BFO knob to gain access to the BFO PITCH knob set screw.

b. Second Method.

(1) Set the receiver controls as instructed in paragraph 85, except set the FUNCTION switch to CAL, and tune the receiver to some 100-kc point above 00 500.

(2) Adjust the LINE METER switch and LINE GAIN control for an indication on the LINE LEVEL meter. Set the BANDWIDTH control to .1 KC.

(3) Adjust the KILOCYCLE CHANGE control for maximum output, as indicated on the CARRIER LEVEL meter.

(4) Turn the BFO switch to ON, and adjust the BFO PITCH control to exact zero beat, as indicated by a slow oscillation of the needle on the LINE LEVEL meter.

(5) If zero beat does not occur with the BFO PITCH knob at zero, loosen the knob, and reset it at zero. It may be necessary to remove the BFO knob to gain access to the BFO PITCH knob set screw.

142. Second Variable If Alignment

(fig. 91)

Figure 91 is a copy of the printing on the top protective cover that is located over the rf subchassis alignment points. Remove this cover and use it, as figure 91, for locating the alignment points.

a. Set the receiver controls as instructed in paragraph 85, except set the frequency indicator to 01 900, and the FUNCTION switch to MGC.

b. Connect the vtvm to the DIODE LOAD terminal 14 and GND terminal 16.

c. Connect the signal generator to the control grid of V203 at test point E210. Adjust the signal generator to 2.1 mc.

Note. After setting the receiver to the specified frequency, tune the signal generator to that frequency. Slowly rock the frequency control on the signal generator back and forth and set it at the point that gives zero beat when the BFO switch is at ON and the BFO PITCH is at 0 (correctly calibrated). Do not depend on the reading on the signal generator frequency dial. During the alignment procedure, readjust the signal generator attenuator as necessary to keep the voltage on the vtvm from exceeding a -7-volt reading, otherwise detector overloading and inaccurate alignment will result.

d. Adjust the slugs in Z216-1, Z216-2, and Z216-3 (L233-1 through L233-3) for maximum diode load voltage.

e. Set the frequency indicator to 01 100, and tune the signal generator to 2.9 mc.

f. Adjust the trimmer capacitors in Z216-1, Z216-2, and Z216-3 (C291-1 through C291-3) for maximum diode load voltage.

g. Repeat the procedures in *b* through *f* above until no further increase in diode load voltage is obtainable.

143. First Variable If Alignment

(fig. 91)

a. Set the receiver controls as instructed in paragraph 85, except set the frequency indicator to 01 250.

b. Connect the signal generator to the grid of V202 at test point E209 (fig. 58). Tune the signal generator to 18.25 mc.

c. Connect the vtvm to the DIODE LOAD terminal 14 and GND terminal 16.

d. Adjust the slugs in Z213-1, Z213-2, and Z213-3 (L232-1 through L232-3) for maximum diode load voltage.

e. Set the frequency indicator to 07 250. Tune the signal generator to 24.25 mc.

f. Adjust the trimmer capacitors in Z213-1, Z213-2, and Z213-3 (C283-1 through C283-3) for maximum diode load voltage.

g. Repeat the procedures in *b* through *f* above until no further increase in diode load voltage is obtainable.

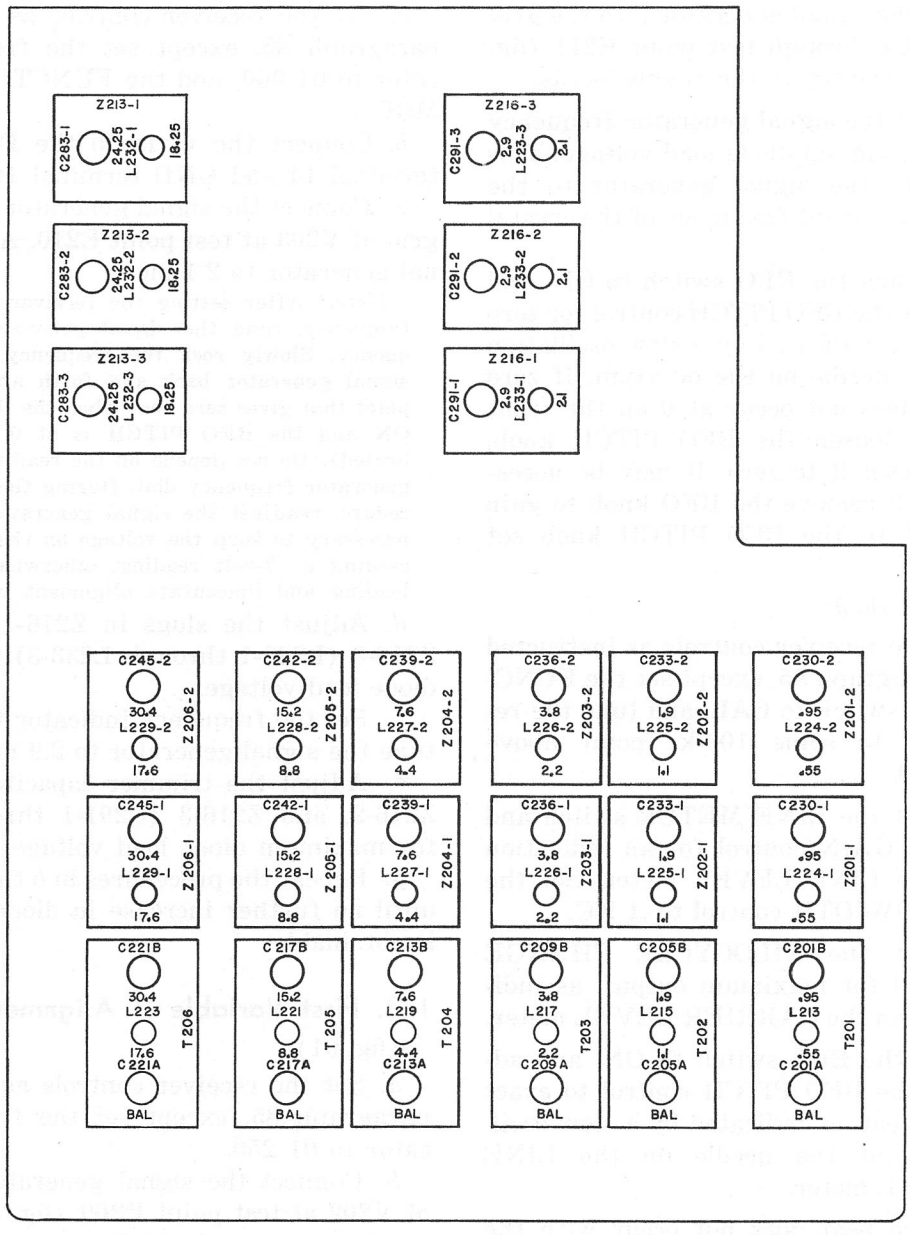

Figure 91. Rf and variable if alignment points.

144. Rf Coil Alignment

(fig. 91)

Use the chart in *g* below when aligning the rf coils.

a. Set the front panel controls as shown in paragraph 85, except set the ANT TRIM control to 0.

b. Connect the dc vtvm to DIODE LOAD terminal 14 and GND terminal 16 on the rear panel of the receiver.

c. If preliminary adjustments are unnecessary, connect the output of the signal generator through the 125-ohm antenna simulator Electrical Dummy Load DA-121/U (part of Accessory Kit MK-228/URM) to the BALANCED

ANTENNA receptacle on the rear panel of the receiver.

d. If preliminary adjustments are necessary because of extreme misalignment of the receiver, connect the output of the signal generator through Test Lead CX-1363/U to the points listed in the last column of the alignment chart in *j* below instead of connecting it to the BALANCED ANTENNA receptacle. Continue with the procedures in *e* through *i* below. After completing the preliminary alignment, repeat all the steps in the chart with the output of the signal generator connected to the BALANCED ANTENNA.

e. Use the MEGACYCLE CHANGE and KILOCYCLE CHANGE controls to tune the receiver to the frequency indicated in the second and third columns of the chart.

f. After setting the receiver frequency to the specified settings, tune the signal generator to the same frequency. Slowly rock the frequency control on the signal generator back and forth and set it at the point that gives zero beat when the BFO switch is ON and the BFO PITCH control is at 0. Do not depend on the reading on the signal generator frequency dial.

g. During the alignment procedure, readjust the signal generator attenuator as necessary to keep the voltage on the vtvm from exceeding —7 volts, otherwise detector overloading and inaccurate alignment might result.

h. Adjust the slugs and trimmer capacitors to the frequency specified. When adjusting the antenna transformers, T201 through T206, adjust the slugs in the transformers farthest from the front panel. The slugs nearest the front panel are used for balancing the antenna input circuits.

i. Proceed with the procedures outlined in the table below. Be sure to adjust the correct slugs and trimmer capacitors, otherwise the alignment procedure might have to be repeated and would be more difficult than it would be normally.

j. Refer to figure 91 for the location of the slugs and adjustments.

Set of rf coils	*Mc reading*	*Kc reading*	*Sig gen freq (kc)*	*Adjust slugs for peak*	*Adjust trimmer capacitors for peak*	*Sig gen connection (preliminary alignment only)*
.5-1 mc	00	550	550	L213		J104
				L224-1		E208
				L224-2		E208
	00	950	950		C201B	J104
					C230-1	E208
					C230-2	E208
1-2 mc	01	100	1,100	L215		J104
				L225-1		E208
				L225-2		E208
	01	900	1,900		C205B	J104
					C233-1	E208
					C233-2	E208
2-4 mc	02	200	2,200	L217		J104
				L226-1		E208
				L226-2		E208
	03	800	3,800		C209B	J104
					C236-1	E208
					C236-2	E208
4-8 mc	04	400	4,400	L219		J104
				L227-1		E208
				L227-2		E208
	07	600	7,600		C213B	J104
					C239-1	E208
					C239-2	E208
8-16 mc	08	800	8,800	L221		J104
				L228-1		E208
				L228-2		E208
	15	200	15,200		C217B	J104
					C242-1	E208
					C242-2	E208
16-32 mc	17	600	17,600	L223		J104
				L229-1		E208
				L229-2		E208
	30	400	30,400		C221B	J104
					C241-1	E208
					C245-2	E208

145. Beat-frequency Oscillator Neutralization

a. Set the receiver controls as instructed in paragraph 85, except set the BANDWIDTH switch to .1 KC and the FUNCTION switch to CAL.

b. With the BFO switch in the OFF position, tune the receiver for maximum output, as observed on the CARRIER LEVEL meter, to any 100-kc calibration point.

c. Turn the BFO switch to ON, and turn the BFO PITCH control to the point where it is normally set.

d. Set the FUNCTION switch to AGC, and the BANDWIDTH switch to 2 KC.

e. Connect the ac vtvm, in parallel with a 50-ohm, noninductive resistor, to IF OUTPUT jack J116 on the rear panel of the receiver.

f. Short the if input to ground at J513 on the if subchassis with a shorted connector.

g. Insert an insulated screw driver through the access hole in the left endplate access hole of the receiver and adjust bfo neutralization capacitor C525 (fig. 66) for minimum output at IF OUTPUT jack J116.

146. Calibration Oscillator Adjustment

This adjustment requires the use of an extremely accurate frequency standard for determining the reference frequency. Station WWV from the Bureau of Standards at Washington, D.C. should be used as the frequency standard if it is at all possible to receive signals from this station. Station WWV operates on frequencies of 2.5 mc, 5 mc, 10 mc, 15 mc, and 20 mc. Use the highest frequency signal that can be received reliably with the receiver. The procedure is as follows:

a. Tune in the highest frequency signal from WWV that can be received reliably.

b. Set the BANDWIDTH switch to .1 KC.

c. Tune the receiver to exact resonance by adjusting the KILOCYCLE CHANGE control for maximum indication on the CARRIER LEVEL meter, and adjust the ANT TRIM control for maximum indication on the CARRIER LEVEL meter.

d. Turn the LINE GAIN control to approximately 5, and set the LINE METER switch to —10.

e. Turn the BFO switch to ON, and adjust the BFO PITCH control to exact zero beat on WWV. This point will occur when the LINE LEVEL meter indication drops to zero and fluctuates at a slow rate.

f. Turn the FUNCTION switch to CAL.

g. Adjust the CAL ADJ calibration oscillator adjusting capacitor C310 through the rear panel access hole (fig. 12) for exact zero beat, as indicated on the LINE LEVEL meter. Make this adjustment with a screw driver through the access hole at the rear of the receiver.

h. Set the FUNCTION switch to AGC, and tune in WWV on the other frequencies, and check the accuracy of the calibration oscillator adjustment.

147. Alignment of If Tuned Circuits (fig. 64)

If transformers T501, T502, T503, and T208 and tuned circuit Z503 are fixed-tuned at 455 kc. Normally, they do not require frequent alignment; when these items are replaced, the replacement parts must be aligned. Transformer T208 can be adjusted from the top of the transformer cover, but T501, T502, T503, and Z503 cannot be adjusted unless their covers are removed.

a. Alignment of T501, T502, and T503.

(1) Set the receiver controls as instructed in paragraph 85, except set the BANDWIDTH switch to 2 KC, and set the FUNCTION switch to MGC.

(2) Disconnect P114 from J514, P213 from J513, and P218 from J518. Connect P114 to J513.

(3) Connect the output of the signal generator to the IF OUTPUT jack on the rear panel of the receiver.

(4) Remove the cover from T501, T502, or T503, as required, by removing the top nuts and lock washers.

(5) Punch a hole in the top of the removed can. Install the new transformer less its cover, and place the cover with the punched hole on the transformer. This is necessary for correct alignment.

(6) Connect the vtvm between DIODE LOAD terminal 14 and chassis ground.

(7) Tune the signal generator to 455 kc, and adjust the signal generator for a diode load reading of less than 7 volts.

Note. Connect a 5,600-ohm resistor across the winding not being tuned. Each of transformers T501, T502, and T503 has two cores, one below the other. The bottom core adjusts the primary winding, and the top core adjusts the secondary winding.

(8) Adjust the primary and secondary windings of the transformer for maximum diode load voltage. Reduce the output of the signal generator if necessary to keep the diode load voltage less than —7 volts.

(9) When completed, disconnect P114 from J513, disconnect the signal generator from the IF OUTPUT jack, and reconnect P114 to J514, P113 to J513, and P118 to J518. Install the new cover on the replacement part.

b. Alignment of Z503.

(1) Perform the procedures in *a*(1) through (3) above.

(2) Replace Z503 if necessary. Remove the cover from Z503, and punch a hole in the top of it. Replace the cover on the coil.

(3) Connect the vtvm to the AGC terminal 4 and chassis ground on the rear panel of the receiver.

(4) Tune the signal generator to 455 kc, and adjust the attenuator on the signal generator for an agc voltage of 1 to 2 volts negative.

(5) Adjust the single core in Z503 for maximum agc voltage.

(6) When completed, perform the procedure in *a*(9) above.

c. Alignment of T208 (fig. 58).

(1) Set the receiver controls as instructed in paragraph 85, except set the FUNCTION switch to MGC, and the BANDWIDTH switch to 2 KC.

(2) Feed the output of the signal generator to test point E211 (fig. 58). Connect the vtvm to DIODE LOAD terminal 14 and chassis ground.

(3) Adjust the signal generator to 455 kc, and adjust the attenuator to give a diode load voltage reading of less than —7 volts.

(4) Adjust T208 for maximum diode load voltage. The adjustment of T208 will be broad, so be sure to attain maximum output.

(5) Disconnect the vtvm and signal generator.

148. Adjustment of GAIN ADJ Potentiometer R519

(fig. 64)

a. General. The correct adjustment of this control is very important. If it is set too low, the receiver sensitivity will be below that required; if it is set too high, the receiver noise will be excessive. This adjustment should be checked monthly, and whenever any tubes are replaced in the rf or if subchassis. When two receivers are operated in diversity operation, the if outputs should be balanced with the GAIN ADJ potentiometer. This is done by setting the gain of one receiver, and then matching the other to it.

b. Procedure for Adjustment.

(1) Disconnect P114 from J514, P213 from J513, and P218 from J518. Connect P114 to J513.

(2) Connect the signal generator through Impedance Adapter MX-1487 to the IF OUTPUT jack on the rear panel of the receiver.

(3) Tune the signal generator to 455 kc, and adjust the attenuator to an output level of 150 microvolts. Be sure the modulation is turned off.

(4) Connect the vtvm to the DIODE LOAD terminal 14 and chassis ground.

(5) Set the receiver controls as instructed in paragraph 85, except set the FUNCTION switch to MGC.

(6) Loosen the hexagonal nut on the GAIN ADJ control and adjust it for a diode load voltage reading of —7 volts. Tighten the hexagonal nut.

(7) Disconnect the signal generator and the vtvm, disconnect P114 from J513, and reconnect P213 to J513, and P218 to J518, and P114 to J514.

c. Adjustment for Diversity Operation. When the signals at the IF OUTPUT jacks of two receivers are used for diversity operation, proceed as follows:

(1) Adjust one receiver according to the instructions in *b* above.

(2) Connect the signal generator to the UNBALANCED ANTENNA receptacle; tune it and the receiver.

(3) Adjust the output level of the signal generator to produce 7 volts between the DIODE LOAD terminal and chassis ground.

(4) Measure the output voltage at the IF OUTPUT jack with the ac vtvm.

(5) Without changing the settings of the signal generator in any way, connect it to the UNBALANCED ANTENNA receptacle of the second receiver, and tune the receiver to the frequency that was used in (2) above.

(6) Measure the output voltage of the second receiver at the IF OUTPUT jack. Adjust the GAIN ADJ control until the voltage is the same as that measured in (4) above.

149. Adjustment of CARR-METER ADJ Potentiometer R523

(fig. 64)

a. Set the FUNCTION switch to AGC and turn the RF GAIN control full counterclockwise.

b. Adjust the CARR-METER ADJ potentiometer on the if subchassis for a zero reading on the CARRIER LEVEL meter on the front panel of the receiver.

150. Variable-frequency Oscillator End Point Adjustment

(fig. 92)

After the receiver has been in service for about a year, a frequency check of the variable-frequency oscillator may reveal that its range may not be exactly 3.455 to 2.455 mc. This condition, in most cases, is caused by aging of the frequency-determining components in the sealed vfo subchassis, and can be compensated for by adjusting end point adjustment L701. Access to this adjustment is made by removing the screw on the front of the sealed vfo unit.

Note. Make this adjustment when the accuracy of the vfo exceeds 500 cps when checked from 000 to +000 on the last three digits of the frequency indicator. The procedure for making the end point adjustment is as follows:

a. Remove the vfo subchassis (par. 127).

b. Remove the plug which covers the end point adjustment L701 (fig. 92).

c. Replace the vfo subchassis (par. 127).

d. Remove the front panel of the receiver (par. 122).

e. Turn the riveted locking plate (fig. 86) by hand until the frequency indicator reads exactly +000.

f. Set the receiver controls as instructed in paragraph 85, except set the FUNCTION switch to CAL, the BFO switch to ON, and the BFO PITCH control to zero beat. Allow the receiver to warm up for at least 1 hour. Adjust for zero beat by adjusting the LINE METER switch and the LINE GAIN control for a reading on the LINE LEVEL meter, and then carefully adjusting the BFO PITCH control for a zero reading, or a slowly fluctuating needle on the LINE LEVEL meter.

g. Turn the riveted locking plate until the frequency indicator reads exactly 000.

h. With a thin screw driver, adjust end point adjustment L701 for zero beat, as indicated by the zero, or slowly fluctuating, reading on the LINE LEVEL meter.

i. Reset the frequency indicator so that the last three digits once again show +000. Reset the BFO PITCH control to zero beat.

j. Repeat the procedures in *g*, *h*, and *i* above until no further improvement can be made.

k. When the job is completed, replace the front panel (par. 122), replace the vfo (par. 127), replace the end point adjustment plug, and replace the vfo.

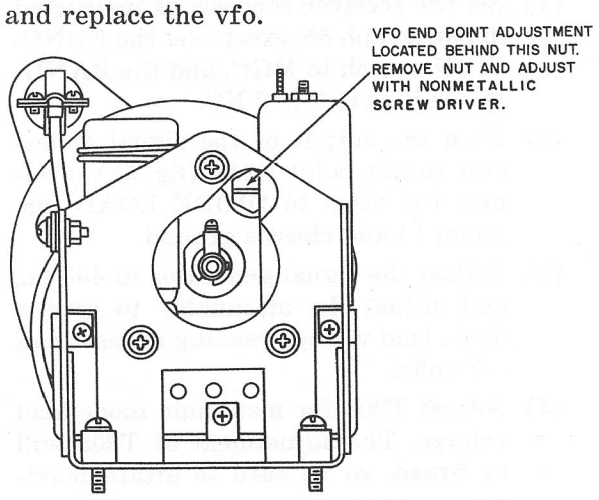

Figure 92. Variable-frequency oscillator end point adjustment.

151. Crystal Filter Neutralizing

Capacitor C520 in tuned circuit Z501 (fig. 90) usually is not adjusted at the time of general receiver alignment; however, if any part of Z501, or the entire tuned circuit is replaced, or if C520 is tuned accidentally, readjustment is required. The procedure is as follows:

a. Set the receiver controls as instructed in paragraph 85, except set the BANDWIDTH switch to .1 KC, and the FUNCTION switch to MGC.

b. Connect the signal generator to test point E211.

c. Connect the vtvm to DIODE LOAD terminal 14 and chassis ground.

d. Tune the signal generator to 455 kc, and adjust the attenuator for —7 volts on the vtvm. Retune the signal generator for maximum vtvm reading, and readjust the attenuator for —7 volts on the vtvm.

e. Record the signal input level, and increase the attenuator setting 60 db. This is 1,000 times the previous input level.

f. Tune the signal generator off 455 kc until the vtvm once again reads —7 volts.

g. Adjust C520 for a dip in vtvm reading, and, on the shield can, mark its setting for reference.

h. Tune the signal generator to the other side of 455 kc for a vtvm reading of —7 volts.

i. Readjust C520 for a dip in the vtvm reading, and mark this second reference point.

j. Note that the two marks are less than 45° apart. Set C520 halfway between these marks.

k. Retune the signal generator to 455 kc as determined by maximum reading on the vtvm.

l. Set the BANDWIDTH switch to 1 KC and note whether the frequency of peak response has shifted. Do this by returning the signal generator for maximum reading on the vtvm.

m. If the peak frequency has shifted, adjust L503 in Z501 until the peak frequency for 1-kc bandwidth is the same as the peak frequency for .1-kc bandwidth.

Note. This may require several operations of adjusting L503.

152. Antenna Trimmer Capacitor Adjustment (fig. 93)

The ANT TRIM control is adjusted properly when the red dot on the helical gear that drives C225 is positioned as shown in figure 93, and the ANT TRIM knob is set at 0. If adjustment is necessary, loosen the helical driving gear, position the helical gears as shown, and reset the knob if necessary to point to 0.

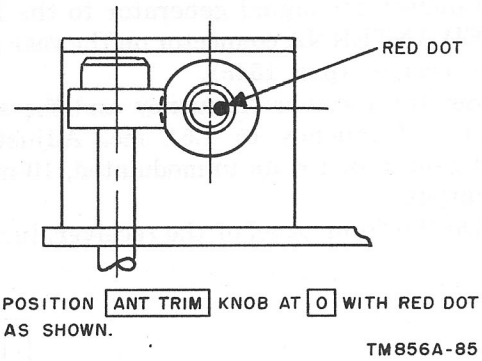

Figure 93. ANT TRIM control adjustment.

Section V. FINAL TESTING

153. Purpose

Equipment that has been repaired must meet definite minimum performance standards before it is returned to service. The tests outlined in paragraphs 154 through 168 are designed to measure the performance capability of a repaired Radio Receiver R-390A/URR. Receivers that meet the minimum standards stated in the tests will furnish satisfactory operation.

154. Test Equipment Required for Final Testing

a. The test equipment required for final testing is listed below. A common usage name is indicated after each component.

Nomenclature	*Common name*
Electronic Multimeter TS-505/U	Vtvm
RF Signal Generator Set AN/URM	Signal generator
Accessory Kit MK-288/URM (for the signal generator)	Accessory kit
Audio Oscillator TS-382/U	Audio oscillator
Oscilloscope OS-8A/U	Oscilloscope
Electronic Multimeter ME-30A/U	Ac vtvm

b. The following noninductive resistors are required:

Quantity	*Value (ohms)*
1	600
1	60
2	68

c. To connect the signal generator to the BALANCED ANTENNA connector, connect it through Electrical Dummy Load DA-121/U (part of the accessory kit), Adapter Connector UG-636A/U, and Adapter Connector UG-971/U.

155. Maximum Audio Output

(fig. 94)

a. Set the receiver controls as instructed in paragraph 85.

b. Connect a 600-ohm, 1-watt or larger, noninductive resistor across LOCAL AUDIO terminals 6 and 7 on the rear panel of the receiver.

c. Connect the ac vtvm across the LOCAL AUDIO terminals.

d. Connect the signal generator to the BALANCED ANTENNA connector on the rear panel of the receiver (par. 154*c*).

e. Set the receiver frequency and the signal generator frequency to 1.51 mc. Adjust the signal generator for an unmodulated, 10-microvolt output.

f. On the front panel of the receiver, turn the BFO switch to ON, and the BFO PITCH control to 0. Adjust the signal generator for zero beat. This can be done accurately by turning the LINE METER switch to 0 and turning the LINE GAIN control clockwise for a meter indication on the LINE LEVEL meter. When the signal generator is tuned to zero beat, the reading on the LINE LEVEL meter will drop to zero. Turn the BFO switch to OFF.

g. Turn the signal generator modulation on at 400 cps, and adjust the percentage of modulation to 30 per cent. Turn the LOCAL GAIN control fully clockwise, and read the output on the ac vtvm. It should read at least 500 milliwatts (17.3 volts rms across 600 ohms).

Note. Power (watts) equals voltage squared divided by 600 ohms.

h. Connect the 600-ohm resistor and the ac vtvm to the PHNS terminal and GND on the rear panel of the receiver. With the LOCAL GAIN control turned fully clockwise, the minimum power output at the PHNS terminal should be greater than 1 milliwatt (.78 volts rms across 600 ohms).

i. Connect the 600-ohm resistor and the ac vtvm across LINE AUDIO terminals 10 and 13. Turn the LINE GAIN control fully clockwise. Turn the LINE METER switch to OFF. Read the ac power on the ac vtvm. The minimum power output should be 10 milliwatts (2.45 volts rms across 600 ohms).

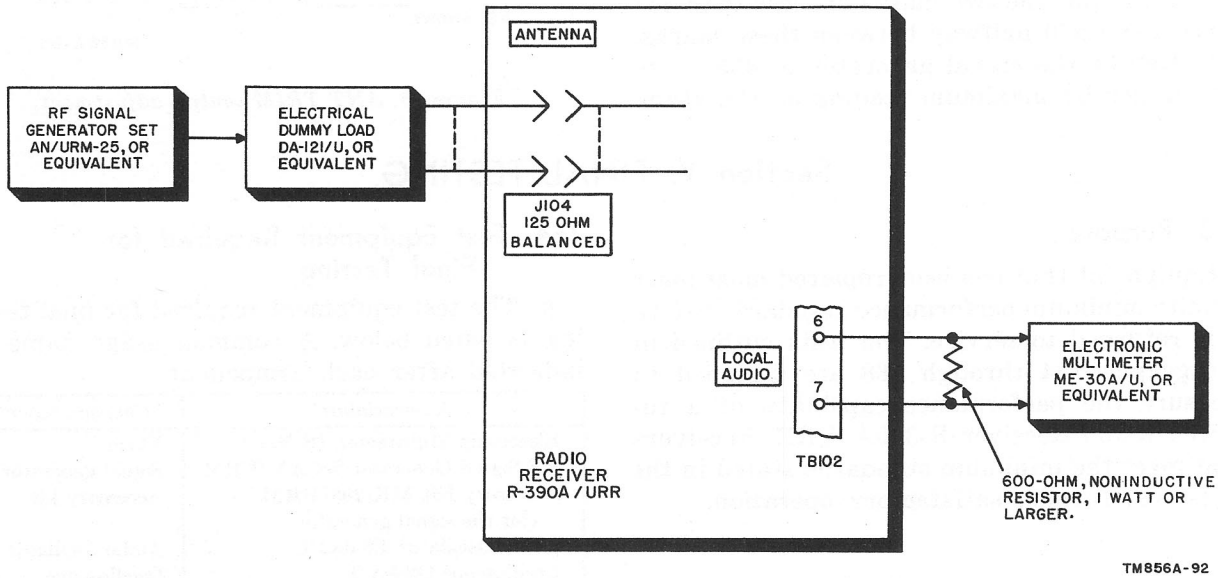

Figure 94. Receiver audio test setup.

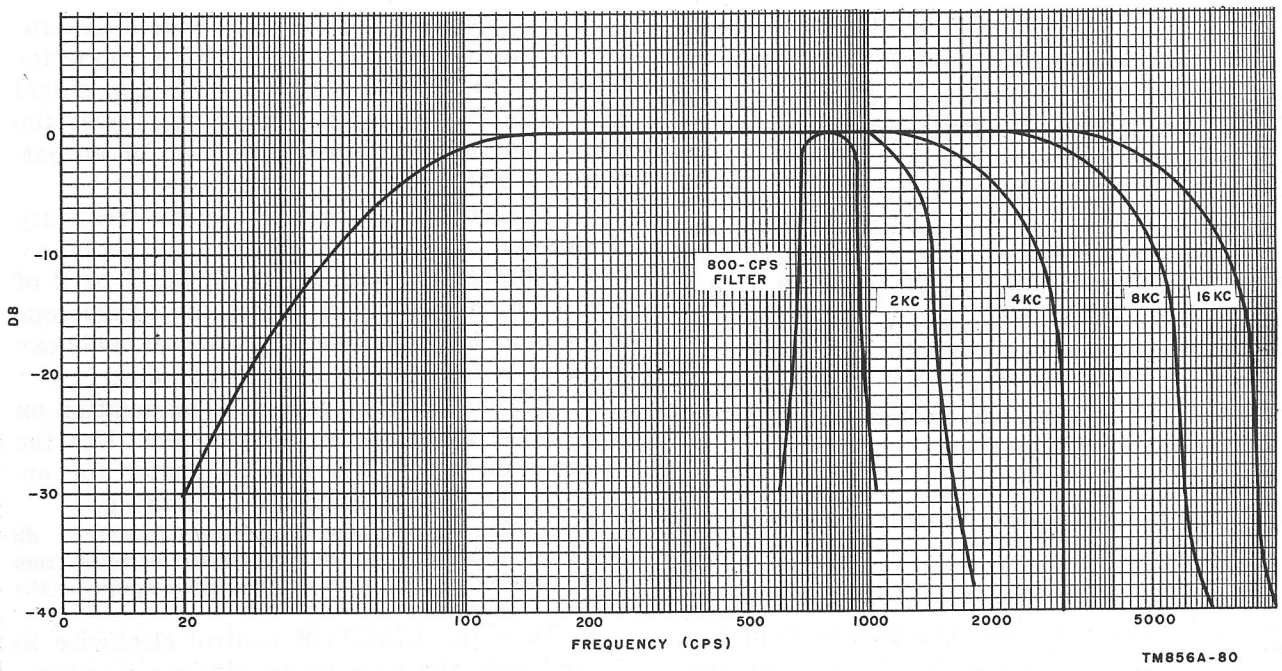

Figure 95. Over-all audio response chart.

156. Audio Harmonic Distortion

a. An example of audio distortion can be heard by listening to a reliable voice signal from a local broadcast station with the LIMITER control turned clockwise to 10. With the LIMITER control turned to OFF, the local audio channel should contain less than 10 per cent harmonic distortion, and the line audio channel should contain less than 6 per cent harmonic distortion.

b. Connect a headset or speaker across the LOCAL AUDIO and LINE AUDIO terminals and listen to the quality of the voice signals. Compare the audio signals from the receiver under test with another receiver known to be operating properly.

157. Hum Level

(fig. 94)

To check the hum level of the receiver, proceed as follows:

a. Set the receiver controls as instructed in paragraph 85.

b. Set the BFO PITCH control to 0, and turn the BFO switch to ON.

c. Connect the signal generator to the BALANCED ANTENNA jack on the rear panel of the receiver (par. 154*c*).

d. Tune the receiver and signal generator to 1.51 mc, and adjust the signal generator output level to 1,000 microvolts.

e. Adjust the signal generator control for zero beat, and turn the BFO switch to OFF.

f. Connect a 600-ohm, 1-watt, noninductive resistor and the ac vtvm across the LOCAL AUDIO terminals 6 and 7 on the rear panel of the receiver.

g. Modulate the rf signal from the signal generator with a 400-cps audio signal, modulated 30 per cent.

h. Adjust the LOCAL GAIN control for a reading of 17.3 volts ac. This corresponds to a power level of 500 milliwatts.

i. Remove the 400-cps audio signal from the rf signal generator, and record the reading on the ac vtvm. Determine the number of db the audio level has dropped from the formula:

$$\text{DB down} = 20 \log \frac{17.3}{\text{recorded voltage}}$$

The hum level should be at least 38 db down.

158. LINE LEVEL Meter Operation

Set the FUNCTION switch to CAL and set the KILOCYCLE CHANGE control to any 100-kc point. With the BFO switch at ON, adjust the BFO PITCH control for an audible tone at the loudspeaker. Set the LINE METER switch to +10 and adjust the LINE GAIN control for an indication of —10 on the LINE LEVEL meter. Set the LINE METER switch to 0; the LINE LEVEL meter should indicate 0 vu. Adjust the LINE GAIN control for an indication of —10 on the LINE LEVEL meter. Set the LINE METER switch to —10. The meter should indicate 0 vu.

159. Limiter Clipping Level

(fig. 96)

The operation of the limiter can be checked by one of two methods. The first method consists of tuning in an am signal, and operating the LIMITER control from the OFF position fully clockwise through settings 1 through 10, and listening to the degree of clipping that results as the LIMITER control is turned clockwise. The second method requires the use of an oscilloscope and an rf signal generator that can be modulated up to a high level. The procedure is as follows:

a. Connect the output of the signal generator to the BALANCED ANTENNA connector (par. 154*c*), and tune the receiver and signal generator to the same frequency. Adjust the attenuator on the signal generator for an output of 1,000 microvolts.

b. Adjust the modulating audio frequency to 400 cps.

c. Connect the oscilloscope to pin 1 or 2 of limiter tube V507, and adjust the oscilloscope for two or three complete sine waves. This can be done with a tube test point adapter.

d. Increase the percentage of modulation on the signal generator to 50 per cent. Use the reading on the LINE LEVEL meter for observing the smooth variation of limiting.

Note. The output may drop approximately 1 db when the LIMITER control is turned clockwise from OFF position, return to 0 db, then drop again as the control is advanced.

e. Turn the LIMITER control clockwise to 1, and note the amount of clipping. Continue turning the LIMITER control clockwise to 10; note that the amount of clipping is smooth and gradual as the control is advanced clockwise.

160. Bfo Calibration and If Output

(fig. 97)

To check the 455-kc if output of the receiver, the bfo leakage into this signal source, and the

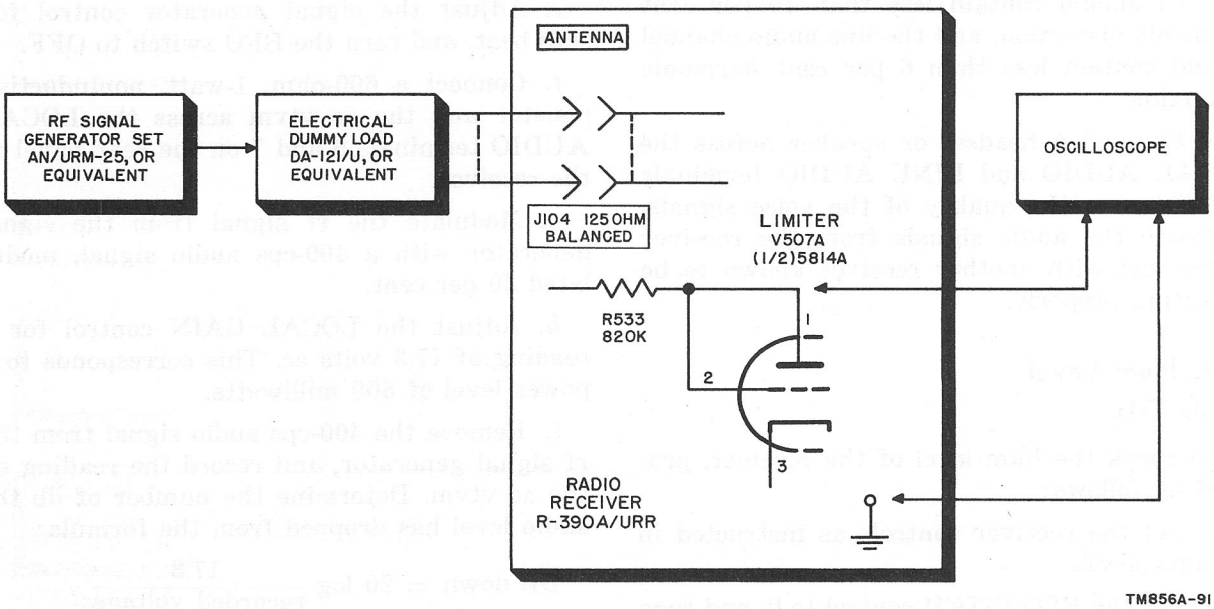

Figure 96. Limiter clipping level test setup.

calibration accuracy of the beat-frequency oscillator, proceed as instructed below.

a. Set the receiver controls as instructed in paragraph 85, except set the FUNCTION switch to MGC and the receiver frequency to 1.510 mc.

b. Connect the output of the signal generator to the BALANCED ANTENNA connector on the rear panel of the receiver (par. 154*c*).

c. Connect the ac vtvm in parallel with a 60-ohm, noninductive resistor to the IF OUTPUT jack on the rear panel of the receiver, and connect the vtvm to DIODE LOAD terminal 14 and GND terminal 16.

d. Connect the vertical input of the oscilloscope in parallel with a 600-ohm, noninductive resistor, 1 watt or larger, across LOCAL AUDIO terminals 6 and 7 on the rear panel of the receiver.

e. Connect the output of the audio oscillator to the horizontal input of the oscilloscope.

f. Adjust the output of the signal generator to 3 microvolts, and readjust the signal generator frequency for maximum indication at DIODE LOAD terminal 14.

g. Adjust the RF GAIN control on the receiver for a reading of 20 millivolts on the ac vtvm connected to the IF OUTPUT jack.

h. Increase the output of the rf signal generator to 30 microvolts, and record the reading on the ac vtvm. The if output should be between 180 and 220 millivolts.

i. Turn the BFO switch to ON, set the BFO PITCH control to 0, and adjust the KILOCYCLE CHANGE knob for zero beat.

j. Set the BFO PITCH control to —3, and adjust the oscilloscope and the audio oscillator for a one-to-one lissajous pattern on the oscilloscope. Read the output frequency of the audio oscillator. It should be between 2,400 and 3,600 cps.

k. Repeat the procedure in *j* above for a BFO PITCH control setting of +3.

l. Set the BANDWIDTH switch on the receiver to 2 KC, turn the BFO switch to ON, and adjust the BFO PITCH control slightly to one side of 0 until a null is indicated on the ac vtvm connected to the IF OUTPUT jack.

m. Note this reading and record it as bfo leakage. The bfo leakage should be less than 750 microvolts.

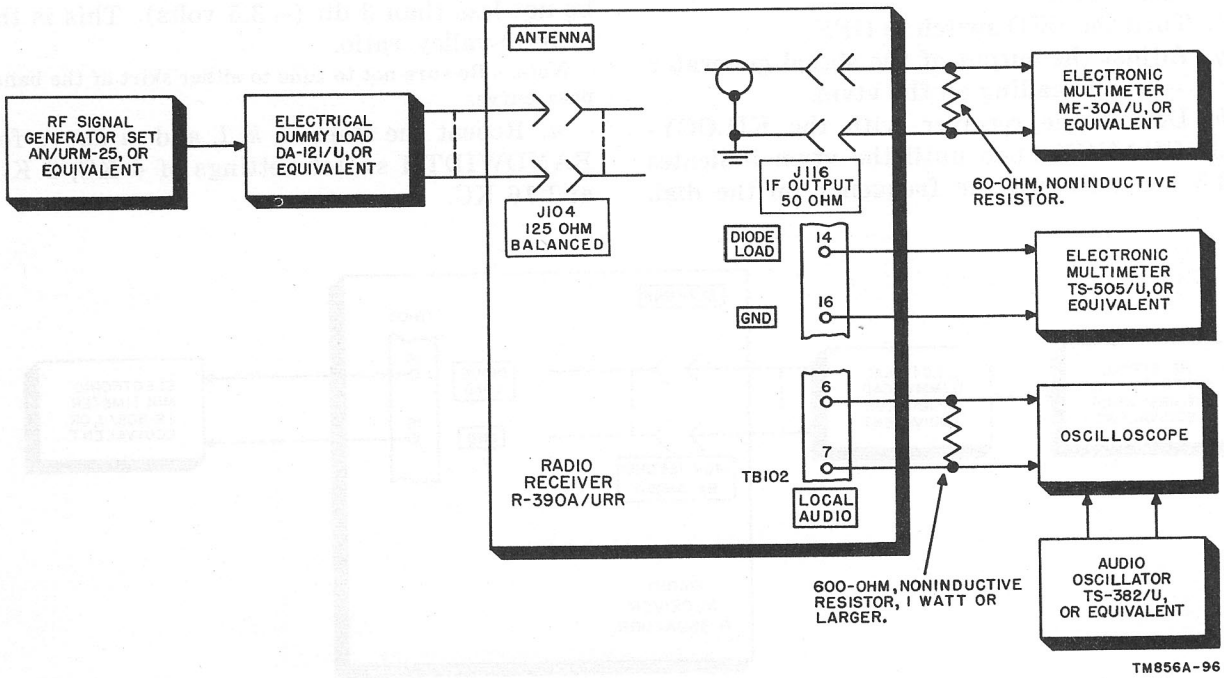

Figure 97. Bfo calibration and if output test setup.

161. Over-all Receiver Selectivity (fig. 98)

To check the over-all selectivity of the receiver for all the positions of the BANDWIDTH switch, except the .1 KC position, proceed as instructed below. The selectivity of the receiver when the BANDWIDTH switch is in the .1 KC position cannot be checked accurately with the given test equipment because of the extreme sharpness of this position.

a. Connect the signal generator to the BALANCED ANTENNA connector on the rear panel of the receiver.

b. Connect the vtvm to DIODE LOAD terminal 14 and GND terminal 16.

c. Tune the receiver to some frequency, ending in an even 10 kc, between .5 and 32 mc. Tune the signal generator to the same frequency.

Note. The bandwidth on the .5- to 1-mc band when the BANDWIDTH switch is in the 16 KC position may be somewhat less than 16 kc because of the bandpass of the .5- to 1-mc antenna and rf coils. This condition is permissible.

d. Set the BFO PITCH control to 0, turn the BFO switch to ON, set the BANDWIDTH switch to 1 KC, and turn the FUNCTION switch to MGC.

e. Adjust the frequency of the signal generator to zero beat.

f. Turn the BFO switch to OFF.

g. Adjust the output of the signal generator for a —5-volt reading on the vtvm.

h. Detune the receiver with the KILOCYCLE CHANGE knob until the vtvm indicates —3.5 volts. Record the frequency on the dial. Detune the receiver still further until the vtvm indicates —2.5 volts. Record the frequency. Do this above and below the 10-kc dial reference frequency.

i. Repeat the procedure in *g* and *h* above for BANDWIDTH switch positions of 2 KC, 4 KC, 8 KC, and 16 KC. Record the results, and compare the receiver bandwidth with the figures given in the chart below.

BANDWIDTH control setting	*DIODE LOAD voltage*	
	−3.5V (3 db)	*−2.5V (6 db)*
1 KC		.8 to 1.3 kc
2 KC		1.9 to 2.3 kc
5 KC		3.6 to 4.4 kc
8 KC	Not less than 7.5 kc	
16 KC	Not less than 13 kc	

j. Reset the BANDWIDTH switch to 2 KC.

k. Within the 2-kc pass band, tune the receiver, with the KILOCYCLE CHANGE control, for maximum diode load voltage as indicated on the vtvm.

l. Adjust the signal generator output for a vtvm reading of —5 volts.

m. Adjust the KILOCYCLE CHANGE control for the minimum vtvm reading within the 2-kc band pass. Record this reading. It should be not less than 3 db (—3.5 volts). This is the peak-to-valley ratio.

Note. Be sure not to tune to either skirt of the bandpass curve.

n. Repeat the steps in *k*, *l*, and *m* above for BANDWIDTH switch settings of 4 KC, 8 KC, and 16 KC.

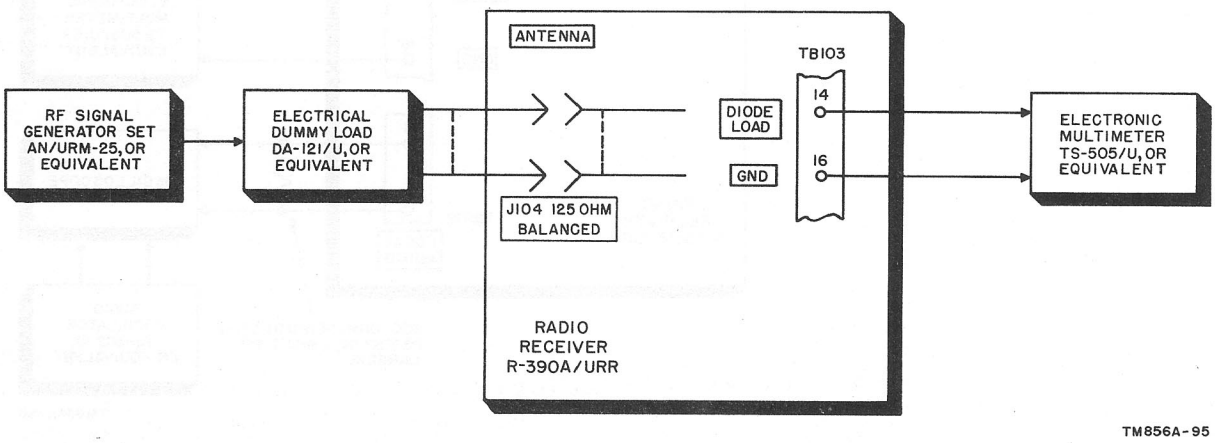

Figure 98. Over-all selectivity test setup.

162. Agc Characteristics
(fig. 99)

To check the operation of the agc circuit and the accuracy of the CARRIER LEVEL meter, proceed as instructed below. Select at least three frequencies over the range of the receiver for making these tests.

a. Set the receiver controls as instructed in paragraph 85.

b. Connect the signal generator to the BALANCED ANTENNA jack on the rear panel of the receiver (par. 154*c*).

c. Connect a 600-ohm, 1-watt or larger, noninductive resistor in parallel with the ac vtvm across LOCAL AUDIO terminals 6 and 7 on the rear panel of the receiver.

d. Connect the vtvm across DIODE LOAD terminal 14 and GND terminal 16 on the rear panel of the receiver.

e. Adjust the attenuator on the rf signal generator for an output of 5 microvolts, and modulate the signal generator with a 400-cps audio signal, modulated 30 per cent.

f. Adjust the LOCAL GAIN control for a 5-milliwatt (1.73 volts rms across 600 ohms) output on the ac vtvm.

g. Increase the setting on the rf signal generator and note the rise in the audio output. Compare the results with the chart below.

Input level (microvolts)	*Audio increase not to exceed*
5	0 db (1.7 volts)
1,000	4 db (2.4 volts)
100,000	8 db (4.3 volts)

h. Reduce the signal generator attenuator setting to obtain a CARRIER LEVEL meter reading of 20 db. Record the output of the signal generator.

i. Increase the signal generator output in 20-db steps, and each time record the CARRIER LEVEL meter reading.

Note. A 20-db increase in signal generator output is the equivalent of multiplying the previous setting by a factor of 10. Use a chart similar to the one below for recording the results. For every change in input level by a factor of 10, the CARRIER LEVEL meter indication should increase from 10 db to 30 db.

Step	*Input from signal generator*	*CARRIER LEVEL meter reading*
1	First setting (see *h* above)	20 (reference)
2	10 times step 1	40 (typical)
3	100 times step 1	58 (typical)
4	1,000 times step 1	78 (typical)
5	10,000 times step 1	Approximately 100 (typical)
6	1/10 times step 1	0 (typical)

j. Decrease the signal input from the signal generator by 20 db (1/10 of the level established in the procedure in *h* above) and record the results under step 6 in the chart above. The reading on the CARRIER LEVEL meter should be from 0 to 6 db.

k. Transfer the connection of the vtvm from the DIODE LOAD terminals to AGC terminal 4 and chassis ground.

l. Set the AGC switch on the receiver to SLOW, and adjust the attenuator on the signal generator until the dc vtvm indicates —10 volts agc bias. Abruptly remove the signal input to the receiver, and record the time for the indication on the CARRIER LEVEL meter to drop from —10 V to —3.5 V. This decrease in meter reading should occur in 4 to 6 seconds.

m. Repeat the procedure in *k* above for settings of FAST and MED on the AGC switch. Since the discharge time constants for these two settings is too fast (.005 to .025 second and .2 to .4 second) for measuring with simple test equipment, check for a rapid decrease in the agc voltage reading when the rf signal is removed.

n. Adjust the attenuator on the signal generator until a reading of .8 volt is obtained on the dc vtvm. Transfer the vtvm connection to DIODE LOAD terminal 14 and measure the voltage at DIODE LOAD terminal 14 and GND terminal 16. It should be between negative 5 and 10 volts.

163. Antenna Grounding Relay

a. Set the receiver controls as instructed in paragraph 85.

b. Connect the signal generator to the BALANCED ANTENNA jack (par. 154*c*).

c. Tune the signal generator and receiver to 30.050 mc.

d. Set the BFO PITCH control to 0, and turn the BFO switch to ON.

e. Tune the signal generator to zero beat, turn the BFO switch to OFF, and adjust the ANT TRIM control or maximum reading at DIODE LOAD terminal 14.

f. Adjust the attenuator on the signal generator for a diode load voltage of —5 volts. Record the output of the signal generator.

g. Turn the FUNCTION switch to CAL, and increase the output of the signal generator to obtain a diode load voltage of —5 volts. Record the output of the signal generator.

h. The attenuation should be at least 40 db, as calculated from the formula:

$$\text{Db} = 20 \text{ times log } \frac{\text{microvolts } (g \text{ above})}{\text{microvolts } (f \text{ above})}$$

164. Antenna Balance Ratio

a. Set the receiver controls as instructed in paragraph 85, except set the MEGACYCLE CHANGE control to 00, the KILOCYCLE CHANGE control to +000, and the FUNCTION switch to MGC.

b. Connect the output of the signal generator between ground and the junction of two 68-ohm composition resistors. Connect the free ends of each 68-ohm resistor to the two contacts on the BALANCED ANTENNA connector on the rear panel of the receiver.

c. Connect the vtvm to DIODE LOAD terminal 14 and chassis ground.

d. Tune the signal generator to the receiver frequency, and set the attenuator to the level that gives —7 volts indication on the vtvm. Note the output of the signal generator.

e. Disconnect the 68-ohm resistors and reconnect the signal generator to the BALANCED ANTENNA jack (par. 154*c*). Repeat the procedure in *d* and note the output of the signal generator.

f. Calculate the db ratio according to the following formula:

$$\text{Db} = 20 \log \frac{\text{microvolts } (d \text{ above})}{\text{microvolts } (e \text{ above})}$$

g. Compare the results with the data in the chart below. Perform the same test for all the other frequencies listed in the chart.

Dial reading	*Transformer*	*Trimmer*	*Ratio (minimum db)*
00 +000	T201	C201A	45
01 +000	T202	C205A	40
03 +000	T203	C209A	40
07 +000	T204	C213A	35
15 +000	T205	C217A	30
31 +000	T206	C221A	20

h. If the balance ratio for any antenna transformer is below that specified in the chart, adjust the balance trimmer (fig. 91) for a minimum with the signal generator connected as instructed in *b* above.

Note. Be sure a true balance is obtained, and not a maximum or minimum trimmer capacity condition.

165. Calibration Signal

a. Set the receiver controls as instructed in paragraph 85, except set the FUNCTION switch to CAL.

b. Tune the KILOCYCLE CHANGE control to 500, set the MEGACYCLE CHANGE control successively to each band, and observe the strength of the 100-kc calibration markers on the CARRIER LEVEL meter. Be sure to peak the ANT TRIM control for each setting of the MEGACYCLE CHANGE control.

c. Determine which band produces the weakest 100-kc markers, adjust the KILOCYCLE CHANGE control to each 100-kc point within this band, and determine which 100-kc point produces the weakest marker signal.

(1) Set the BFO control to 0.

(2) Set the BFO switch to ON.

(3) Adjust the KILOCYCLE CHANGE control for zero beat.

(4) Adjust the BFO PITCH control for a maximum indication on the LINE LEVEL meter.

(5) Adjust the LINE LEVEL control and the LINE METER switch for an indication of 0 vu on the meter.

(6) Tune the KILOCYCLE CHANGE control to 10 kc away from zero beat.

(7) The LINE LEVEL meter indication

should decrease at least 10 vu when the KILOCYCLE CHANGE control is tuned 10 kc away from the zero beat position.

166. Am Sensitivity
(fig. 99)

a. The am sensitivity of the receiver is measured for a signal plus noise-to-noise ratio of 10 to 1 at 10 millivolts power output.

b. Connect the signal generator to the BALANCED ANTENNA connector (par. 154*c*). Connect the ac vtvm to LOCAL AUDIO terminals 6 and 7 on the rear panel of the receiver.

c. Tune the receiver and the signal generator to .75 mc.

d. Set the BFO PITCH control to 0 and turn the BFO switch to ON.

e. With modulation off, tune the signal generator for zero beat. Turn the BFO switch to OFF.

f. Adjust the LOCAL GAIN control for a .8-volt noise indication on the ac vtvm.

g. Turn on the signal generator modulation and adjust it for 30 per cent modulation at 400 cps. Peak the ANT TRIM control.

h. Adjust the output of the signal generator for a 2.5-volt signal-plus-noise indication on the ac vtvm.

i. Repeat *g* and *h* above as necessary until no further readjustment is necessary. The signal generator output in microvolts for this condition is the sensitivity figure for the receiver. It should meet the test limits shown in *m* below.

j. Repeat the procedures in *c* through *i* above for all the other frequencies listed in the chart in *m* below for BALANCED ANTENNA connection.

k. Connect the output of the signal generator to the UNBALANCED ANTENNA connector through Electrical Dummy Load DA-124/U and adapter UG-636A/U.

l. Using the same procedures given in *c* through *i* above, determine the am sensitivity for all the frequencies specified for an unbalanced antenna connection in the chart *m* below.

Frequency (mc)	*Maximum input (microvolts)*	
	BALANCED ANTENNA	*UNBALANCED ANTENNA*
.500		12
.750	3.3	
1.000		8
1.510	3.3	
2.000		5.5
3.000	3.3	
5.000		5.5
6.000	3.3	
10.000		5.5
11.000	3.3	
14.000	3.3	
18.000		5.5
20.000	4.4	
21.000	4.4	
22.000	4.4	
23.000	4.4	
26.000	4.4	
27.000	4.4	
28.000	4.4	
29.000	4.4	
30.000	4.4	

167. Cw Sensitivity

Cw sensitivity is measured in the same manner as am sensitivity, except that the unmodulated output of the signal generator is used, and the BFO PITCH control is adjusted for an audio output of about 1,000 cps. To measure the noise output, the signal is removed. The sensitivity figure measured should be approximately one third of that for am sensitivity.

168. Over-all Gain

a. Adjust the receiver controls as instructed in paragraph 85, except set the FUNCTION switch to MGC.

b. Connect the signal generator to the BALANCED ANTENNA jack (par. 154*c*). Connect the vtvm to DIODE LOAD terminal 14 and GND terminal 16.

c. Tune the signal generator and receiver to 500 kc.

d. Turn the BFO PITCH control to 0, and turn the BFO switch to ON.

e. Tune the signal generator to zero beat, and turn the BFO switch to OFF.

f. Adjust the ANT TRIM control for maximum indication at DIODE LOAD terminal 14.

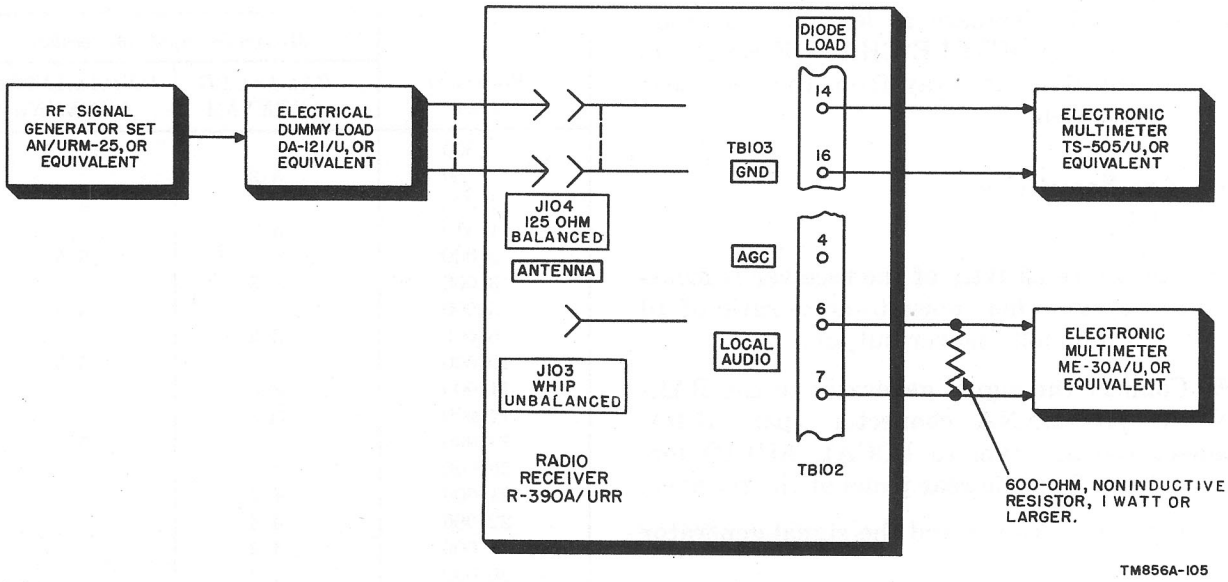

Figure 99. Sensitivity and over-all gain, test setup.

g. Adjust the attenuator on the signal generator for a reading of —7 volts at DIODE LOAD terminal 14. Record the output of the signal generator.

h. Compare this reading with the value in the chart (*j* below), and repeat the procedure in *d* through *g* above for all the other frequencies shown in the chart.

i. Remove the signal generator connection from the receiver and connect it to the UNBALANCED ANTENNA jack through Electrical Dummy Load DA-124/U and Adapter UG-636A/U.

j. Repeat the procedure in *d* through *h* above for all the test frequencies and sensitivity limits shown in the chart below.

Frequency (mc)	*Maximum input (microvolts)*	
	BALANCED ANTENNA	*UNBALANCED ANTENNA*
.500	4	10
.750	4	—
.990	4	—
1.000	4	8
1.510	4	—
1.990	4	—
2.000	4	6
3.000	4	—
3.999	4	—
4.000	4	6
6.000	4	—
7.999	4	—
8.000	4	—
9.000	–	6
12.000	4	—
15.000	4	—
16.000	4	—
17.000	–	6
24.000	4	—
31.990	4	—

Note. The gain variation of gain within any coil range should not exceed four to one.

CHAPTER 7
SHIPMENT AND LIMITED STORAGE AND DEMOLITION TO PREVENT ENEMY USE

Section I. SHIPMENT AND LIMITED STORAGE

169. Disassembly

The following instructions are recommended as a guide for preparing the receiver for transportation and storage.

a. Disconnect the antenna lead-in cable.

b. Remove all connections to the terminal strips on the rear panel of the receiver.

c. Unplug the headphone cord from the PHONES jack on the front panel.

d. Disconnect the power cable from the ac outlet and wind the cable around the clips provided for it on the rear panel of the receiver.

170. Repacking for Shipment or Limited Storage

The exact procedure for repacking depends on the material available and the conditions under which the receiver is to be shipped or stored. Use the procedures outlined in *a* through *c* below whenever possible. The information concerning the original packaging (par. 12 and fig. 6) will also be helpful.

a. Material Requirements.

Material	*Quantity*
Waterproof barrier material	22 sq ft
Fiberboard, corrugated, single-faced	40 sq ft
Tape, gummed, paper	10 ft
Tape, water-resistant, pressure-sensitive, 3-inch	16 ft
Steel strapping, 5/8-inch by .020-inch	13 ft
Wooden shipping box, 22 1/4 x 20 1/2 x 14 3/4	1

b. Packaging.

(1) Inclose each manual in a close-fitting bag made of waterproof barrier material. Seal the seams with water-resistant, pressure-sensitive tape.

(2) Cushion the receiver on all surfaces with pads made of single-faced corrugated fiberboard, in order to absorb shocks that might be caused by handling and shipping. Secure the cushioning with gummed paper tape.

c. Packing.

(1) Line the nailed wooden box with waterproof barrier material. Leave enough material so that it may be sealed over the receiver when it is placed in the box.

(2) Place the packaged receiver and the packaged manuals in the box.

(3) Seal the waterproof barrier material with the water-resistant, pressure-sensitive tape.

(4) Nail the top on the wooden box.

(5) On intertheatre shipments only, apply two bands of steel strapping.

(6) Mark the shipping box according to the requirements of SR 55-720-1, Section II.

Section II. DEMOLITION OF MATERIEL TO PREVENT ENEMY USE

171. Authority for Demolition

The receiver and its accessories will be demolished only upon the order of the commander. The demolition procedures outlined in paragraph 172 will be used to prevent the enemy from using or salvaging the equipment.

172. Methods of Destruction

Use any or all of the methods listed in *a* through *f* below to make the equipment completely useless.

a. Smash. Smash the controls, tuning mechanism, tubes, coils, switches, capacitors, transformers, filters, and meters; use sledges, axes, handaxes, pickaxes, hammers, crowbars, or other heavy tools.

b. Cut. Cut the power cord, the antenna lead-in cable, and the headset cord; use an axe, a handaxe, or a machete.

c. Burn. Burn cords, cables, and manuals; use gasoline; kerosene, oil, flamethrowers, or incendiary grenades.

d. Bend. Bend the panel, the cabinet, and the main frame.

e. Explosives. If explosives are necessary, use firearms, grenades, or TNT.

f. Disposal. Bury or scatter the destroyed parts in slit trenches or fox holes, or throw them into streams.

RESISTOR COLOR CODE MARKING
(MIL-STD RESISTORS)

AXIAL-LEAD RESISTORS (INSULATED)

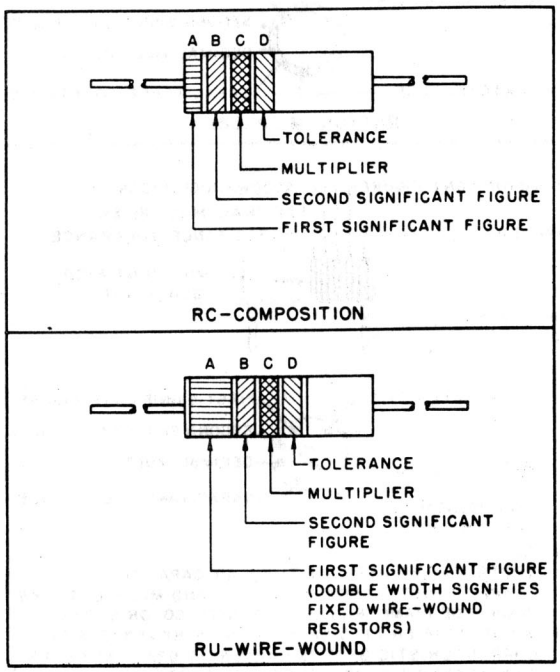

RADIAL-LEAD RESISTORS (UNINSULATED)

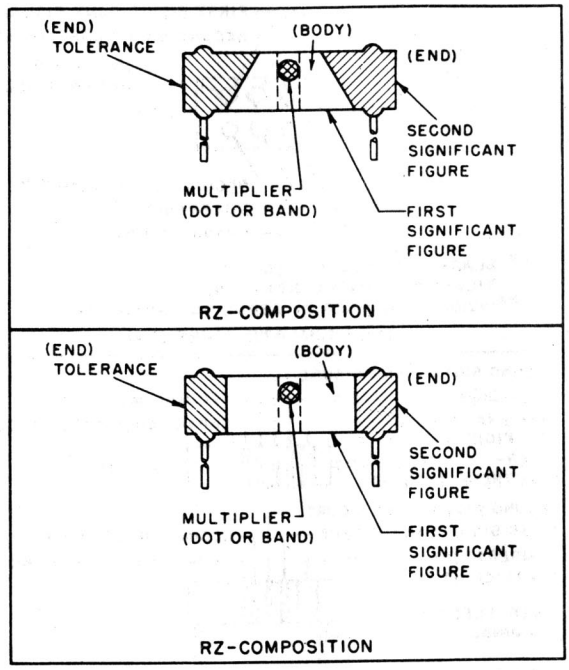

RESISTOR COLOR CODE

BAND A OR BODY*		BAND B OR END*		BAND C OR DOT OR BAND*		BAND D OR END*	
COLOR	FIRST SIGNIFICANT FIGURE	COLOR	SECOND SIGNIFICANT FIGURE	COLOR	MULTIPLIER	COLOR	RESISTANCE TOLERANCE (PERCENT)
BLACK	0	BLACK	0	BLACK	1	BODY	± 20
BROWN	1	BROWN	1	BROWN	10	SILVER	± 10
RED	2	RED	2	RED	100	GOLD	± 5
ORANGE	3	ORANGE	3	ORANGE	1,000		
YELLOW	4	YELLOW	4	YELLOW	10,000		
GREEN	5	GREEN	5	GREEN	100,000		
BLUE	6	BLUE	6	BLUE	1,000,000		
PURPLE (VIOLET)	7	PURPLE (VIOLET)	7				
GRAY	8	GRAY	8	GOLD	0.1		
WHITE	9	WHITE	9	SILVER	0.01		

*FOR WIRE-WOUND-TYPE RESISTORS, BAND A SHALL BE DOUBLE-WIDTH. WHEN BODY COLOR IS THE SAME AS THE DOT (OR BAND) OR END COLOR, THE COLORS ARE DIFFERENTIATED BY SHADE, GLOSS, OR OTHER MEANS.

EXAMPLES (BAND MARKING):
10 OHMS ±20 PERCENT: BROWN BAND A; BLACK BAND B; BLACK BAND C; NO BAND D.
4.7 OHMS ±5 PERCENT: YELLOW BAND A; PURPLE BAND B; GOLD BAND C; GOLD BAND D.

EXAMPLES (BODY MARKING):
10 OHMS ±20 PERCENT: BROWN BODY; BLACK END; BLACK DOT OR BAND; BODY COLOR ON TOLERANCE END.
3,000 OHMS ±10 PERCENT: ORANGE BODY; BLACK END; RED DOT OR BAND; SILVER END.

STD-RI

Figure 100. Resistor color code.

CAPACITOR COLOR CODE MARKING
(MIL-STD CAPACITORS)

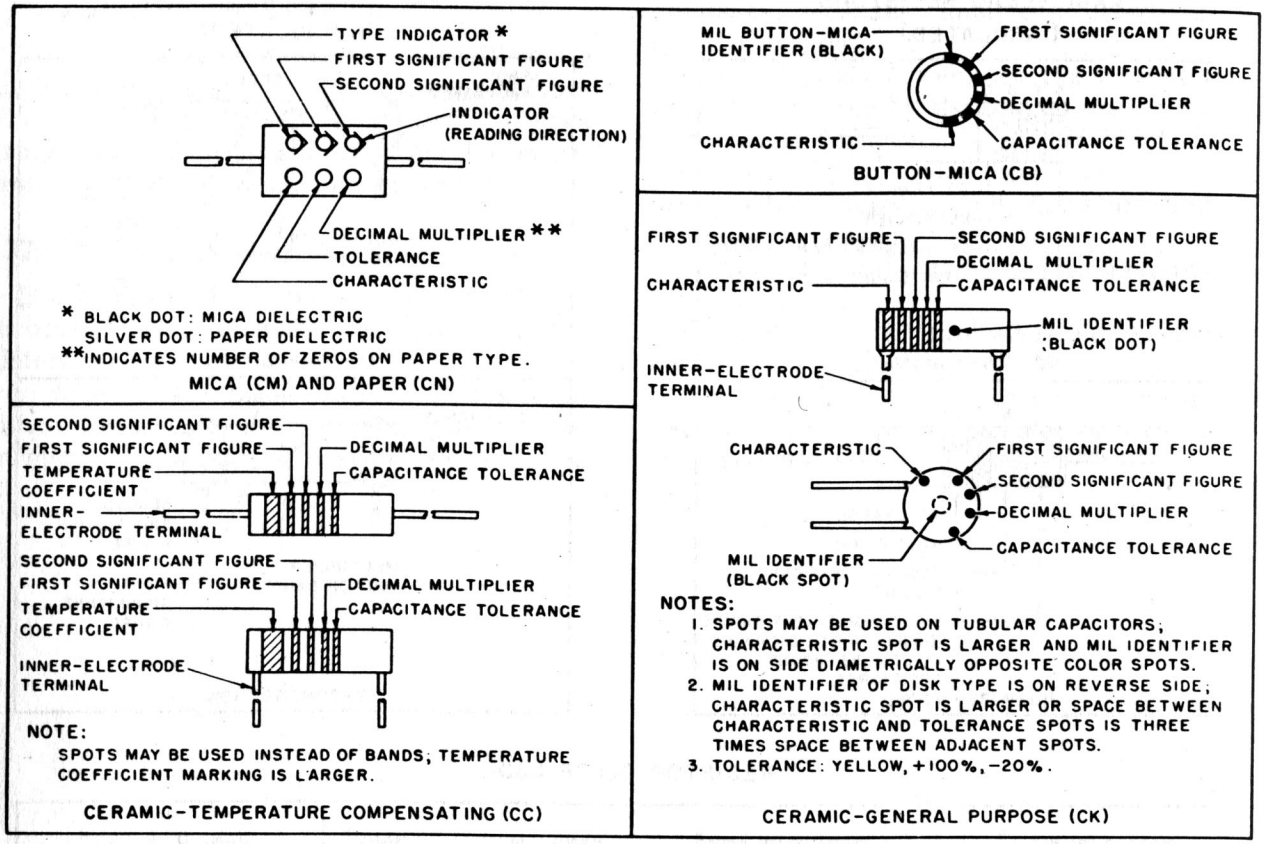

CAPACITOR COLOR CODE

COLOR	SIG FIG.	MULTIPLIER		CHARACTERISTIC[1]				TOLERANCE[2]					TEMPERATURE COEFFICIENT (UUF/UF/°C)
		DECIMAL	NUMBER OF ZEROS	CM	CN	CB	CK	CM	CN	CB	CC		
											OVER 10UUF	10UUF OR LESS	CC
BLACK	0	1	NONE		A			20	20	20	20	2	ZERO
BROWN	1	10	1	B	E	B	W				1		-30
RED	2	100	2	C	H		X	2		2	2		-80
ORANGE	3	1,000	3	D	J	D			30				-150
YELLOW	4	10,000	4	E	P								-220
GREEN	5		5	F	R						5	0.5	-330
BLUE	6		6		S								-470
PURPLE (VIOLET)	7		7		T	W							-750
GRAY	8		8			X						0.25	+30
WHITE	9		9								10	1	-330(±500)[3]
GOLD		0.1						5		5			+100
SILVER		0.01						10	10	10			

1. LETTERS ARE IN TYPE DESIGNATIONS GIVEN IN MIL-C SPECIFICATIONS.
2. IN PERCENT, EXCEPT IN UUF FOR CC-TYPE CAPACITORS OF 10 UUF OR LESS.
3. INTENDED FOR USE IN CIRCUITS NOT REQUIRING COMPENSATION.

STD-C1

Figure 101. Capacitor color code.

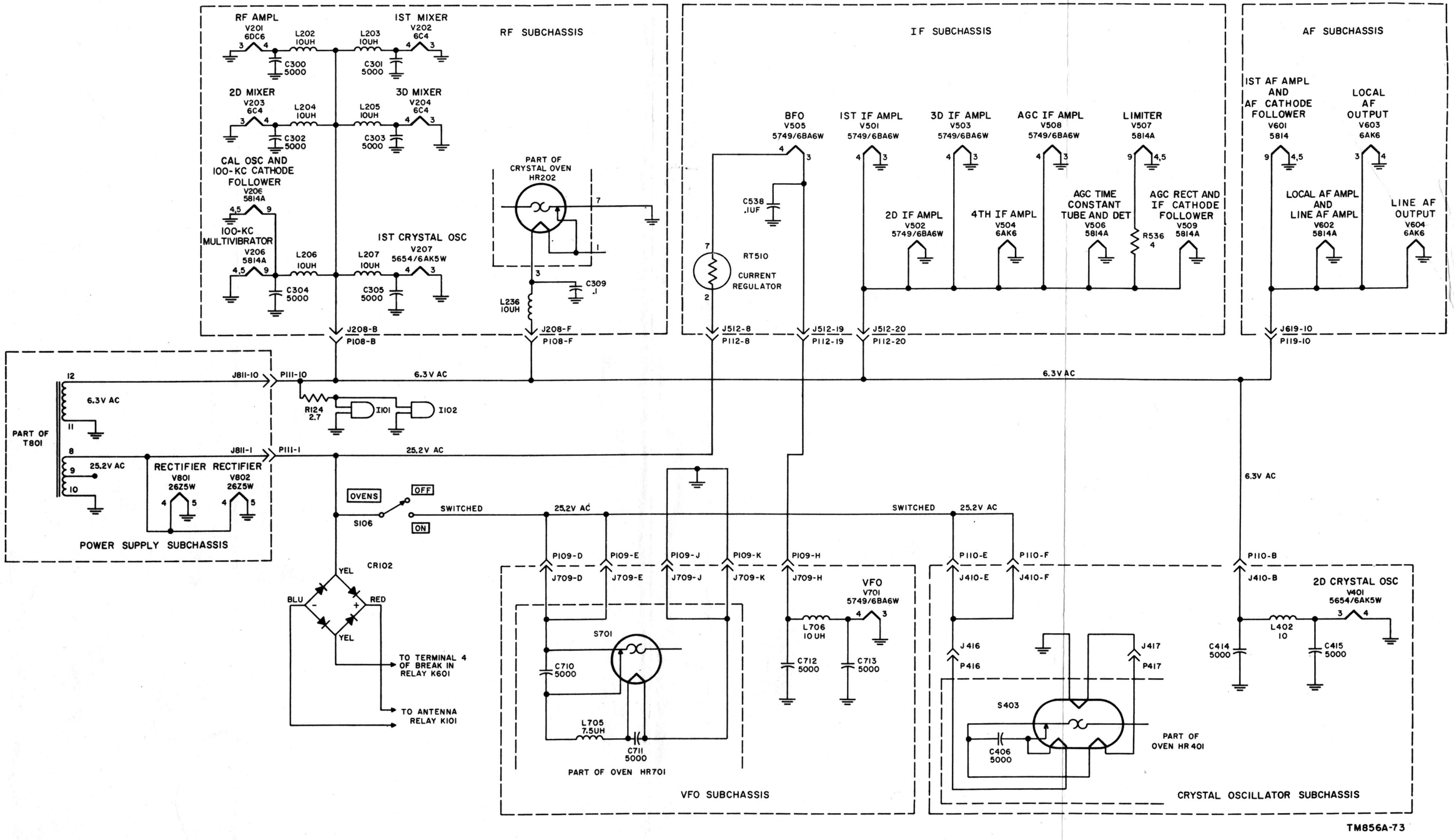

Figure 102. Filament and oven circuits, schematic diagram.

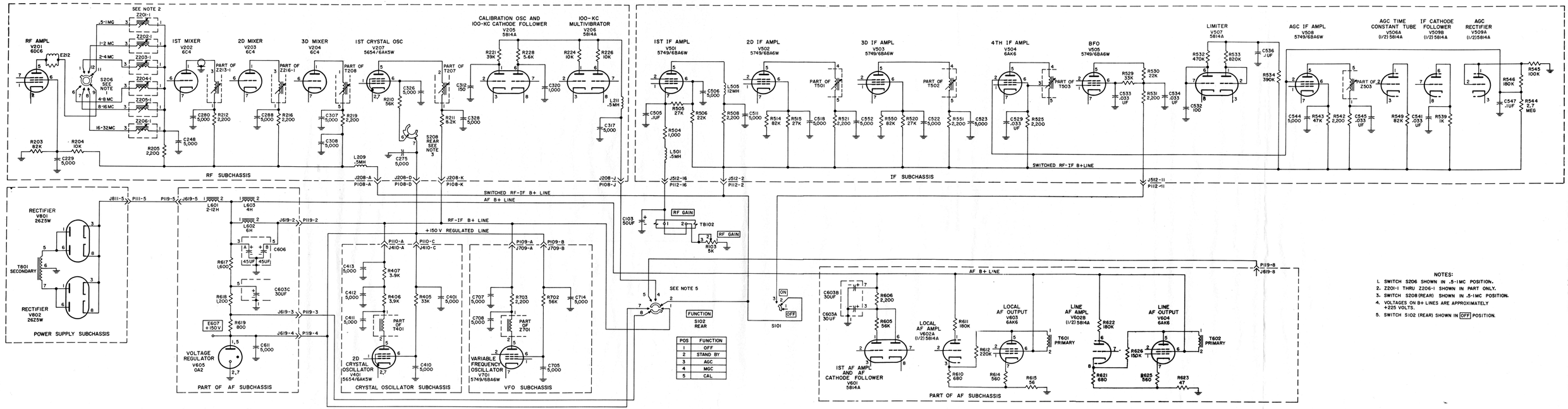

NOTES:

1. SWITCH S206 SHOWN IN .5-1MC POSITION.
2. Z201-1 THRU Z206-1 SHOWN IN PART ONLY.
3. SWITCH S208 (REAR) SHOWN IN .5-1MC POSITION.
4. VOLTAGES ON B+ LINES ARE APPROXIMATELY +225 VOLTS.
5. SWITCH S102 (REAR) SHOWN IN OFF POSITION.

Figure 103. B+ circuits, schematic diagram.

TM856A-72

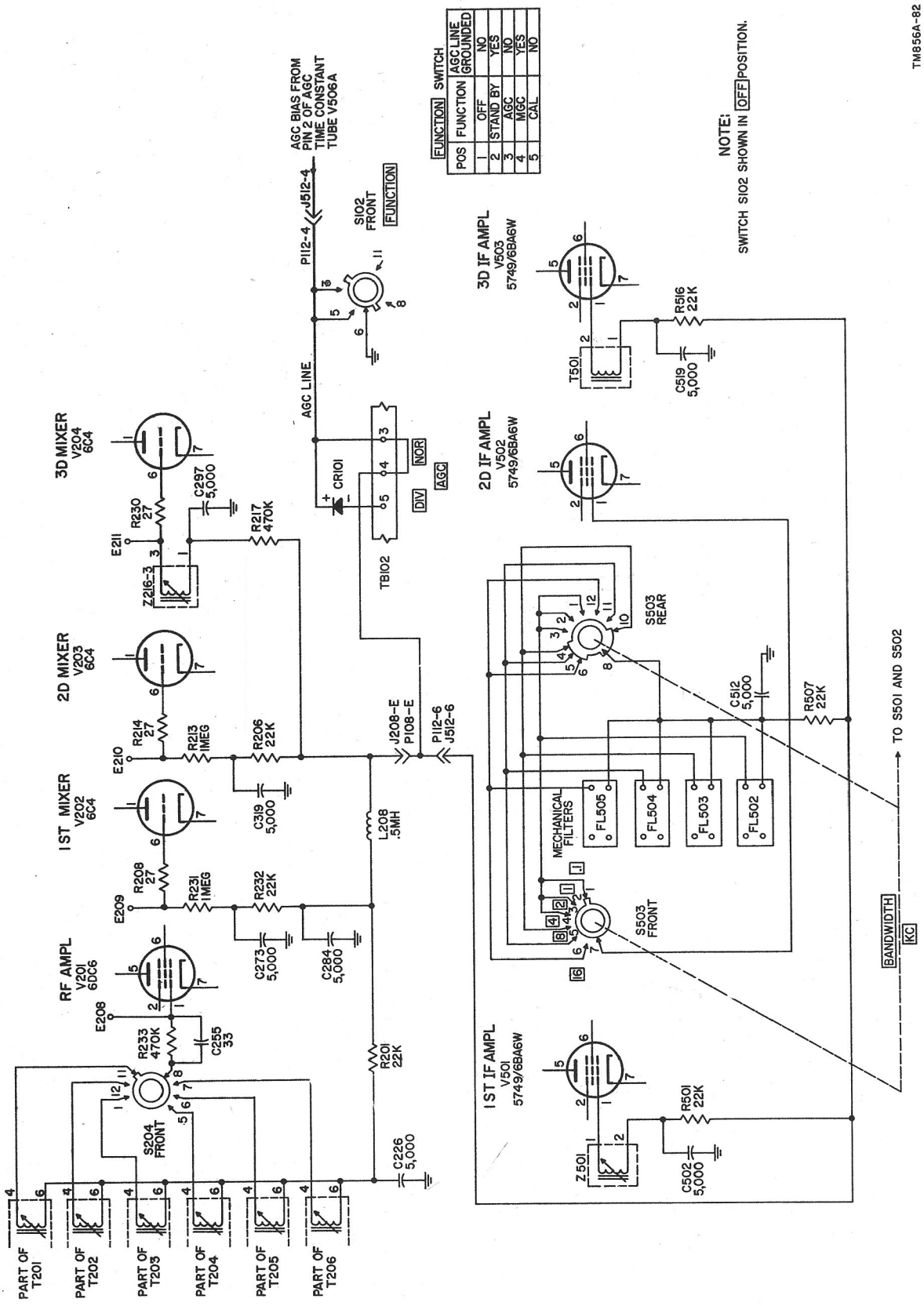

Figure 104. Age bias distribution, schematic diagram.

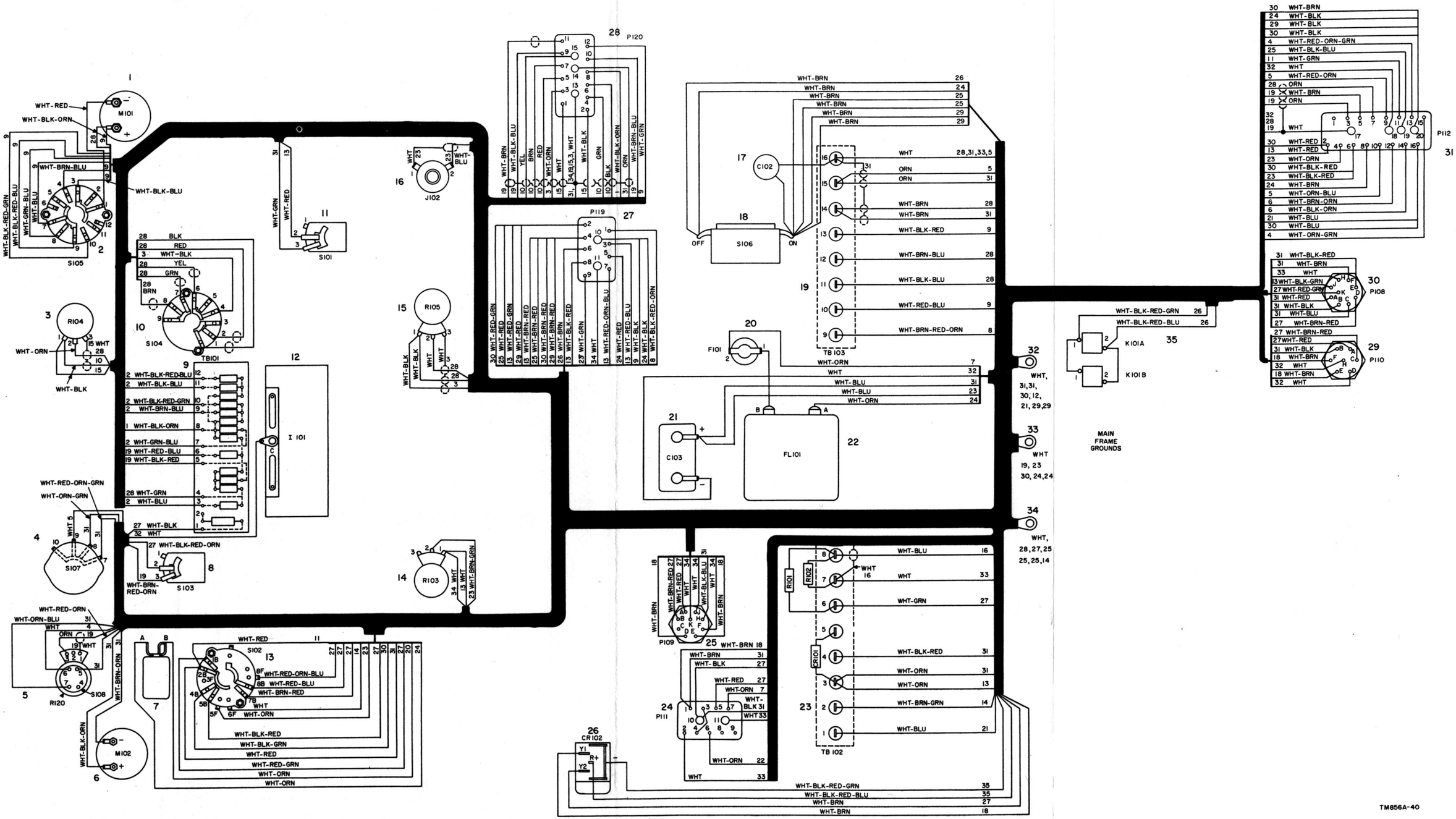

Figure 105. Main frame, wiring diagram.

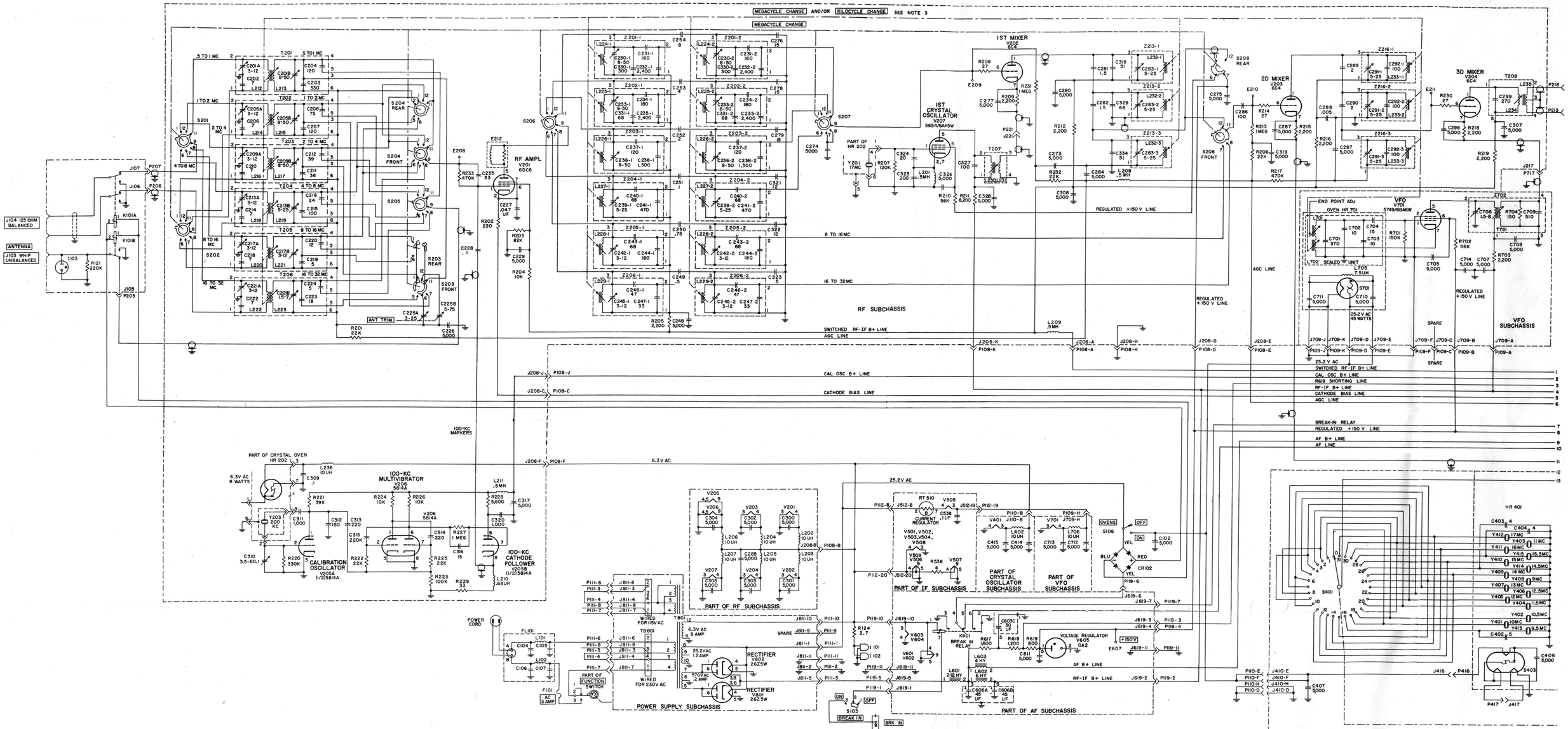

Figure 106. Radio Receiver R-390A/URR, schematic diagram.

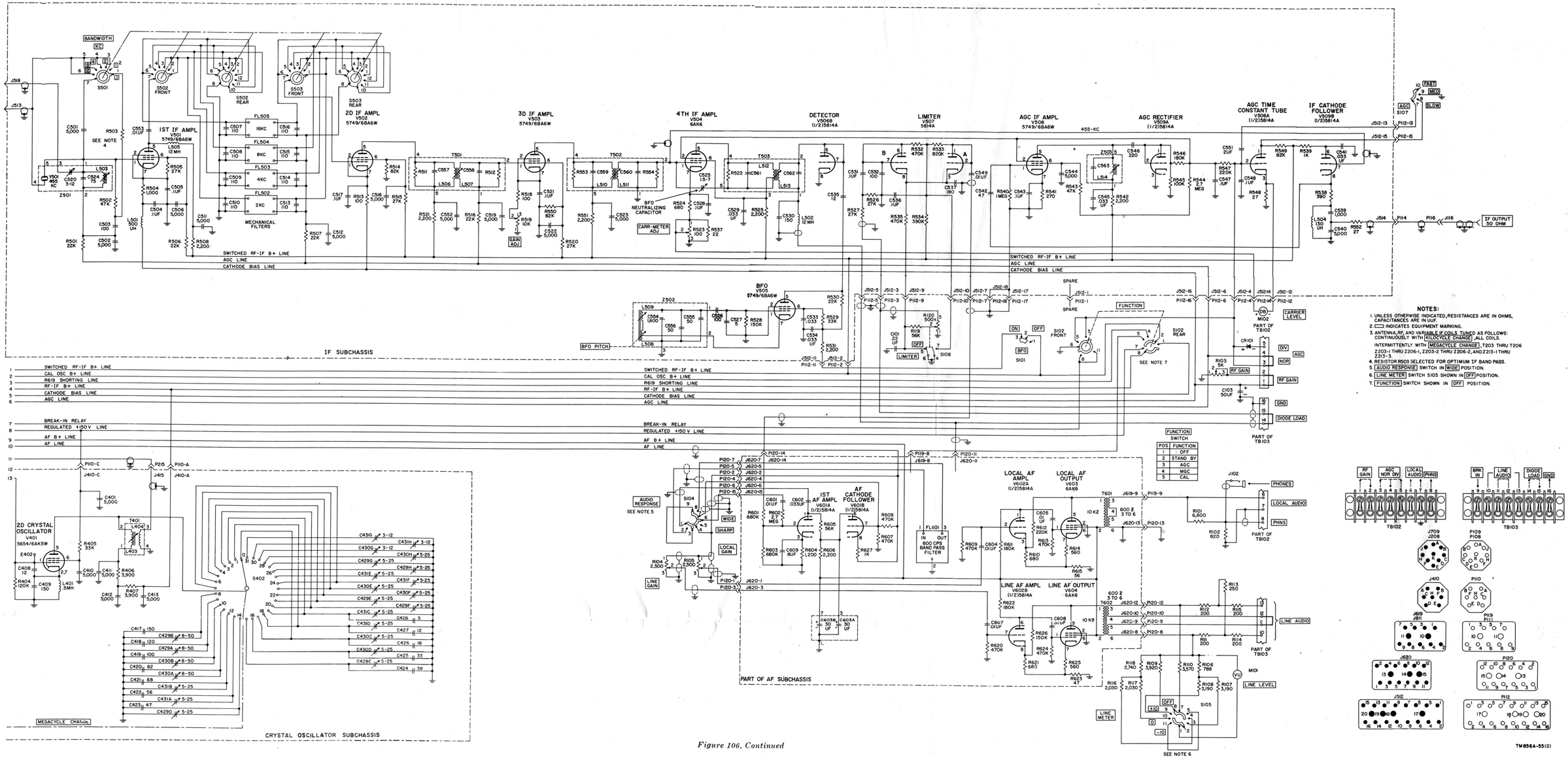

NOTES:

1. UNLESS OTHERWISE INDICATED, RESISTANCES ARE IN OHMS, CAPACITANCES ARE IN UUF.
2. ▭ INDICATES EQUIPMENT MARKING.
3. ANTENNA, RF, AND VARIABLE IF COILS TUNED AS FOLLOWS: CONTINUOUSLY WITH KILOCYCLE CHANGE, ALL COILS. INTERMITTENTLY WITH MEGACYCLE CHANGE, T203 THRU T206 Z203-1 THRU Z206-1, Z203-2 THRU Z206-2, AND Z213-1 THRU Z213-3.
4. RESISTOR R503 SELECTED FOR OPTIMUM IF BAND PASS.
5. AUDIO RESPONSE SWITCH IN WIDE POSITION.
6. LINE METER SWITCH S105 SHOWN IN OFF POSITION.
7. FUNCTION SWITCH SHOWN IN OFF POSITION.

Figure 106. Continued

TM856A-55(2)

INDEX

A

	Paragraph	Page
Additional equipment required	10	7
Adjustments. (*See* alignment.)		
Af amplifier:		
Circuit analysis	71–73	75–77
Subchassis removal and replacement	126	139
Tests	101	123
Af cathode follower	71	76
Alignment and adjustment:		
Antenna trimmer	152	165
Beat-frequency oscillator	141	158
Beat-frequency oscillator neutralization	145	161
Calibration oscillator	75	81
CARR-METER ADJ potentiometer	149	164
Crystal filter neutralizing capacitor	151	165
Crystal oscillator switch	140	156
First variable if	143	159
GAIN ADJ potentiometer R519	148	163
Mechanical and electrical synchronization	138	152
Preliminary checks	137	152
Rf coil	144	160
Second variable if	142	159
T501, T502, T503, and Z503	147	162
Variable frequency oscillator end point	150	164
Variable frequency oscillator tracking	139	155
Antenna:		
Circuit analysis	54	44
Connection	15*b*	13
Antijamming instructions	28	24
Authority for demolition	171	176
Automatic gain control circuit	70	69
Auxiliary connections	17*d*	17

B

Beat- frequency oscillator:		
Calibration	141	158
Circuit analysis	68	68
Neutralization	145	161
Bench testing	86	97
Block diagram	52	40
Break-in Circuit	74	80

C

Cabinets and cases, description	8	7
Calibration oscillator marker	75	81
Carrier level meter	116*b*	132
Checking	13	12

INDEX (cont)

	Paragraph	Page
Circuit analysis:		
Automatic gain control	70	69
Beat-frequency oscillator	68	68
Break-in circuit	74	80
Calibration oscillator markers	75	81
Crystal filter	62	57
Detector and limiter	67	66
First af amplifier and af cathode follower	71	75
First crystal oscillator	57	51
First if amplifier	63	59
First mixer	56	49
Function switch	77	85
If cathode follower	69	69
Line audio channel	72	77
Mechanical if filters	64–65	60–62
Power circuits	76	81
Rf amplifier	55	47
Second crystal oscillator	59	55
Second mixer	58	51
Second, third, and fourth if amplifiers	66	64
Third mixer	60	56
Variable frequency oscillator	61	57
Components, table	6	6
Connections:		
Antenna:		
Balanced 125-ohm	15*b* (2)	13
Unbalanced whip	15*b* (1)	13
Audio output	15*c*	14
Auxiliary	17*d*	17
Single-sideband reception	16*d*	17
Space-diversity reception of radioteletype signals:		
Type 1	16*b*	16
Type 2	16*c*	16
Space diversity reception of voice signals	16*a*	14
Control circuits	78	87
Controls	19	18
Conversion scheme	107	128
Crystal:		
Checking	104	125
Filter	62	57
Oscillator:		
Alignment	140	156
Subchassis removal and replacement	124	138

D

Dc resistance of transformers and coils	106	127
Description and data	3–10	2–7
Description, receiver	7	7
Destruction, methods	172	176

INDEX (cont)

	Paragraph	Page
Detector	67	66
Dial calibration	26	23
Disassembly and reassembly of rf gear train assembly	131	143
Disassembly prior to repacking	169	175
E		
Equipment performance check list	49	36
External controls:		
Agc	78*d*	87
Break-in	78*b*	87
Diode load	78*c*	87
Rf gain	78*e*	87
F		
First af amplifier	71	75
First crystal oscillator	57	51
First if amplifier	63	59
First mixer	56	49
Forms and records	2	1
Fourth if amplifier	66	64
Frequency indicator calibration	26	23
Front panel removal and replacement	122	135
Function switch	77	87
Fuses	13*f*	12
I		
If:		
Alignment	142–143	159
Circuit anlysis	62–70	57–69
Stage gain charts	105	126
Subchassis removal and replacement	125	139
Test	102	123
If cathode follower	69	69
Initial inspection	89	101
Installation:		
Antenna	14*a*	12
Radio Receiver R-390A/URR	14*b*	12
L		
Limiter	67	66
Line audio channel:		
Circuit analysis	73	77
Test	100	121
Line level meter	116*a*	131
Local audio channel:		
Circuit anlysis	72	77
Test	99	119
Lubrication of mechanical tuning system	133	150

INDEX (cont)

	Paragraph	Page
M		
Mechanical if filters	64–65	60–62
Mechanical tuning system	79–81	88–90
O		
Operation:		
Usual:		
Cw	23	22
Frequency shift	24	22
Mcw	22	22
Single sideband	25	23
Stopping procedure	27	23
Voice	21	19
Unusual:		
Arctic climate	30	24
Desert climate	32	25
Tropical climate	31	25
P		
Packaging data	12	9
Power supply:		
Circuit analysis	76	81
Removal and replacement	128	140
Preventive maintenance	35–38	26–28
Purpose and use (receiver)	3	2
R		
Reconditioned equipment, service on	17	17
Removal and replacement:		
Af subchassis	126	139
Antenna relay assembly	129	140
Crystal oscillator subchassis	124	138
Front panel	122	135
General notes	121	134
If subchassis	125	139
Parts within subchassis	130	141
Power supply subchassis	128	140
Rf subchassis	123	136
Vfo subchassis	127	139
Repacking for shipment or limited storage	170	175
Rf amplifier:		
Alignment	144	160
Circuit analysis	55	47
Stage gain chart	105	126
Subchassis removal and replacement	123	136
Rf and variable if conversion scheme	107	128

INDEX (cont)

	Paragraph	Page
Rf gear train assembly parts legend	132	148
Running spares	9	7
Rustproofing and painting	41	30

S

Scope	1	1
Second crystal oscillator	59	54
Second if amplifier	66	64
Second mixer	58	51
Service upon receipt of new equipment	12–16	9–14
Single sideband	40	30
Siting Requirements:		
External	11*a*	9
Internal	11*b*	9
Space-diversity reception	4*a*	2
Special tools	34	26
Stage gain charts	105	126
Starting	20	19
Stopping	27	23
Subchassis testing	47	34
System application	4	2

T

Technical characteristics	5	6
Test equipment	84, 154	96–165
Tests:		
Af amplifier	101	123
Agc characteristics	162	171
Antenna balance ratio	164	172
Antenna grounding relay	163	171
Audio harmonic distortion	156	167
Audio output, maximum	155	166
Bandpass filter, 800 cps	111	130
Bfo calibration	161	170
Calibration signal	165	172
Gain, over-all	168	173
High-frequency oscillator injection voltage	93	111
Hum level	157	167
If output	161	170
If subchassis	102	123
Gain and adjustment	95	113
Limiter clipping level	159	168
Line audio channel	100	121
Line meter calibration	158	168
Local audio channel	99	119
Mechanical if filter	110	130
Operational	92	108
Oscillator crystals	104	125

	Paragraph	Page
Over-all receiver gain	94	112
Rf subchassis	103	124
Selectivity, over-all	160	168
Sensitivity:		
Am	166	173
Cw	167	173
Standard conditions	136	152
Third if amplifier	66	64
Third mixer	60	56
Tools, materials, test equipment required	33, 135, 154	26–151–165
Trouble shooting:		
Agc voltage distribution notes	109	129
Calibration oscillator circuit waveforms	120	134
Chart, stage gain	105	126
Checking:		
B+ circuit for shorts	44, 90	33–102
Crystal oven thermostats	112	130
Current regulator tube RT510	115	131
Filament and oven circuits for opens and shorts	91	105
Lamp I 103	117	132
Line level and carrier level meters	116	131
Rectifiers CR101 and CR102	114	131
Relays K101 and K601	113	131
Dc resistance of transformers and coils	106	127
Equipment performance check list	49	36
Gain measurements	45–46	33
Initial control settings	85	97
Initial inspection	89	101
Notes	88	100
Organizational level	42–49	30–36
Precautions	87	97
Resistance measurements at subchassis connectors	119	133
Sectionalizing	47	34
Signal substitution	98	116
Technique	82	95
Test equipment	84, 154	96–165
Voltage and resistance checks	97	115
Tube testing	48	36

U

Uncrating and unpacking	12	9
Used equipment	17	17

V

Variable frequency oscillator:		
Circuit analysis	61	57
Removal and replacement	127	139
Visual inspection	43	30

	Paragraph	Page
Voice reception	23	22
Voltage and resistance checks	97	115
W		
Weatherproofing	40	30

Andy (James A.) Moorer

Digitally signed by Andy (James A.) Moorer
DN: CN = Andy (James A.) Moorer, O = Adobe Systems Incorporated, OU = Enterprise Services
Reason: I am the author of this document
Date: 2003.12.07 19:19:12 -08'00'

[AG 413.44 (30 Dec. 55]

BY ORDER OF THE SECRETARY OF THE ARMY

MAXWELL D. TAYLOR,
General, United States Army,
Chief of Staff.

OFFICIAL:

JOHN A. KLEIN,
Major General, United States Army,
The Adjutant General.

DISTRIUBTION:

Active Army:

CNGB (1)

Tec Svc, DA (1) except
CSIGO (30)

Tec Svc Bd (1)

Hq CONARC (5)

CONARC Bd (Incl ea Test Sec) (1)

Army AA Comd (2)

OS Maj Comd (5)

OS Base Comd (5)

Log Comd (5)

MDW (1)

Armies (5)

Corps (2)

Tng Div (2)

Ft & Cp (2)

Gen & Br Svc Sch (5) except
Sig Sch (25)

Gen Depots (2) except
Atlanta Gen Depot (None)

Sig Sec, Gen Depots (10)

Sig Depots (20)

NG: State AG (6); Units—Same as Active Army except allowance is one copy to each unit.

USAR: None.

For explanation of abbreviations used, see SR 320-50-1.

Trans Terminal Comd (2)

OS Sup Agencies (2)

Sig Fld Maint Shops (3)

Sig Lab (5)

Mil Dist (1)

Units organized under following TOE:

11-7R, Sig Co, Inf Div (2)

11-16R, Hq&Hq Co, Sig Bn, Corps or Abn Corps (2)

11-57R, Armd Sig Co (2)

11-127R, Sig Rep Co (2)

11-128R, Sig Depot Co (2)

11-500R (AA-AE), Sig Svc Org (2)

11-557C, Abn Sig Co (2)

11-587R, Sig Base Maint Co (2)

11-592R, Hq&Hq Co, Sig Base Depot (2)

11-597R, Sig Base Depot Co (2)

32-51R, Hq&Hq Co, Comm Recon Gp (2)

32-55R, Comm Recon Bn (2)

32-56R, Hq&Hq Co, Comm Recon Bn (2)

32-57R, Comm Recon Opr Co (2)

☆ U. S. GOVERNMENT PRINTING OFFICE : 1957 O -416426